Volvo Construction Equipment

EW160D

VOLVO EXCAVATORS 16.2-18.2t 156hp

A PASSION FOR PERFORMANCE.

At Volvo Construction Equipment, we're not just coming along for the ride. Developing products and services that raise productivity – we are confident we can lower costs and increase profits for industry experts. Part of the Volvo Group, we are passionate about innovative solutions to help you work smarter – not harder.

Helping you to do more

Doing more with less is a trademark of Volvo Construction Equipment. High productivity has long been married to low energy consumption, ease of use and durability. When it comes to lowering life-cycle costs, Volvo is in a class of its own.

Designed to fit your needs

There is a lot riding on creating solutions that are suited to the particular needs of different industry applications. Innovation often involves high technology – but it doesn't always have to. Some of our best ideas have been simple, based on a clear and deep understanding of our customers' working lives.

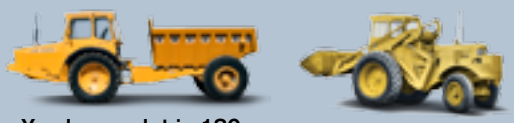

You learn a lot in 180 years

Over the years, Volvo has advanced solutions that have revolutionized the use of construction equipment. No other name speaks Safety louder than Volvo. Protecting operators, those around them and minimizing our environmental impact are traditional values that continue to shape our product design philosophy.

We're on your side

We back the Volvo brand with the best people. Volvo is truly a global enterprise, one that is on standby to support customers quickly and efficiently – wherever they are.

We have a passion for performance.

Volvo Trucks

Renault Trucks

Mack Trucks

UD Trucks

Volvo Buses

Volvo Construction Equipment

Volvo Penta

Volvo Aero

Volvo Financial Services

BUILT FOR EFFICIENCY.

At Volvo we are proud of our fuel efficient and environmentally responsible machines, we deliver more power for less fuel. The EW160D is no exception; our newly developed engine meets all legislative requirements, improves performance and lowers fuel consumption to save you time and money.

Fuel efficiency

Increased fuel efficiency from Volvo's D6 Stage IIIB/Tier 4 Interim engine, enhanced hydraulic system and well matched Volvo components. More power with ultimate efficiency.

Diesel Particulate Filter (DPF)

The active-type DPF includes a Diesel Oxidation Catalyst function and regeneration burner. The system temporarily holds the exhaust fumes and incinerates them, lowering emissions without reducing performance.

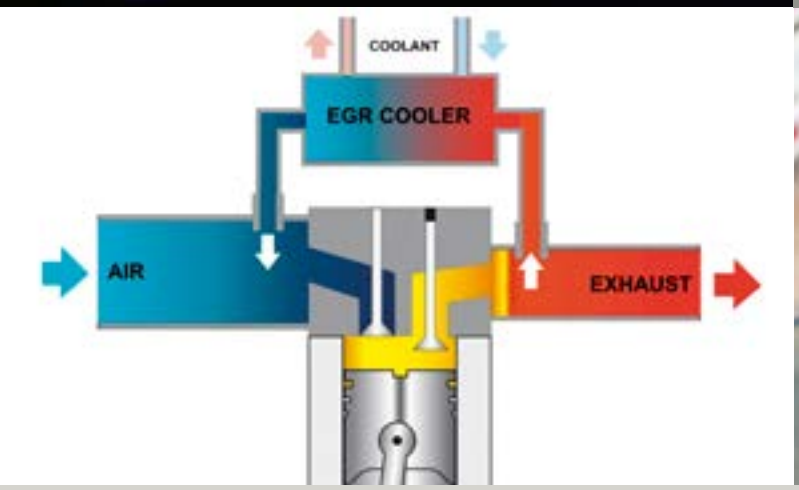

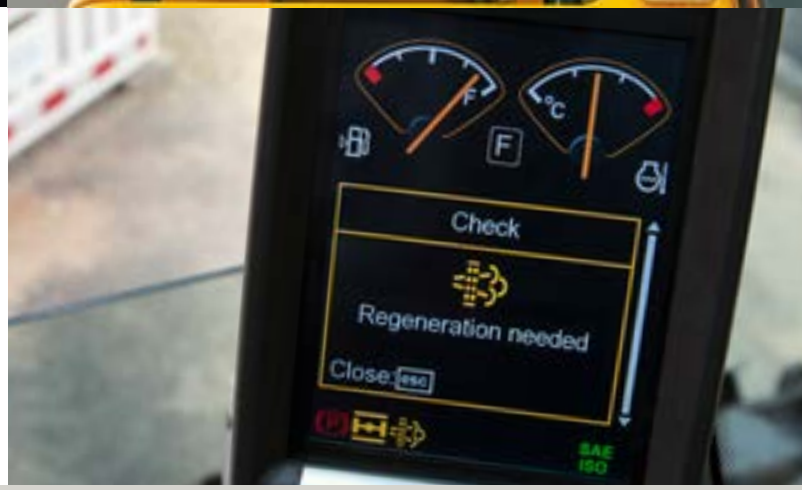

Exhaust Gas Recirculation (EGR) and Electronic Control Unit (ECU)

Efficient cooled external EGR reduces oxygen concentration and decreases the combustion temperature for lower emissions. The ECU controls the mix of recirculated exhaust gas and fresh air – crucial for reducing emissions, performance and fuel economy.

Regeneration

Particles collected during filter cleaning are oxidised and transformed into non-toxic CO_2 every 6-10 hours. Volvo's regeneration system does not interrupt operation, performance or productivity. Regeneration can be postponed if the timing is inconvenient.

Volvo D6 Stage IIIB/Tier 4 Interim engine

Volvo's efficient diesel engine with V-ACT technology gives you more power, while consuming less fuel, for high torque at low engine speeds. Low emission levels for ultimate efficiency and environmental care.

DEMAND CONTROL.

Industry-leading cab

All-round visibility and an excellent operator environment are at the heart of Volvo's cab design. The spacious cab, with ample storage and leg room and easy to access controls, increases operator productivity and reduces fatigue.

Volvo puts you in control with its industry leading cab; achieve more while working comfortably. Get productive with our excellent all-round visibility, increased safety and ample space. See more and do more with Volvo.

Adjustable steering column

Slim design of the easily adjustable steering column ensures visibility is not impaired for increased operator comfort.

ROPS

The cab features Roll Over Protective Structure (ROPS) which meets the ISO 12117-2 safety standard for increased peace of mind in the unlikely event of machine roll over.

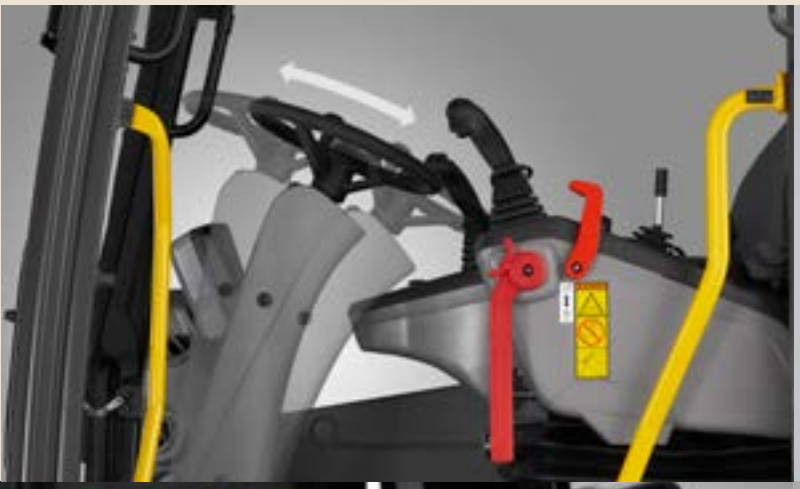

Smart controls

Navigate through the colour I-ECU monitor via the conveniently located control panel. The monitor can be clearly read in all light conditions for easy visual and diagnostic checks, increasing uptime and productivity.

Automatic climate control system

Operators can set their ideal temperature with Volvo's powerful climate control system which is fitted as standard. Industry leading air circulation and defrosting capability is delivered with 14 well-spaced vents for increased comfort and productivity.

WE SET THE STANDARD.

Quality is at the forefront of the wheeled excavator design. These tough machines are highly mobile, productive and flexible – both on and off-road. Trust Volvo for quality you can rely on.

Anti-slip plate

Added operator and service mechanic safety from punched anti-slip plate which provides superb grip, especially in wet or icy conditions.

Foot steps and hand rail

Safe and easy access to the machine is ensured by two convenient foot steps and a hand rail.

LED rear lights

LED lights on the rear counterweight provide longer life time and improved appearance.

Stays and locking devices

Volvo's automatic stays prevent doors being blown closed for added safety, they can easily be manually released. Automatic locks ensure the doors close properly and enhance appearance.

Hammer/shear (X1) and attachment rotation (X3) management

Increase your wheeled excavator versatility with optional hydraulics functions X1 hammer/shear and X3 rotation. X1 function utilizes the main system hydraulic flow to operate attachments requiring one or two way flow whereas X3 function provides an appropriate 2 way flow for tilting or rotating attachments.

Tightening eyes

A new type of over dimensioned tightening eyes secure the machine to the trailer and enable it to be lifted. The four eyes are on top of the undercarriage sides to ensure easy operator access.

Quality

Volvo matched components and an excellent combination of features come together to produce a quality machine. Our rear view camera is fitted as standard and provides superb clarity via the colour I-ECU monitor. An optional side view camera further increases safety.

PERFORMANCE YOU CAN MEASURE.

Increased digging power

Perform at a higher level with increased digging power for greater productivity. Optimized breakout and digging forces provided by perfectly dimensioned hydraulic cylinders and optimized equipment geometry.

The Volvo wheeled excavators are designed to help you do more. An enhanced hydraulic system and well matched Volvo components guarantee you increased digging performance. It all adds up to more with Volvo.

Attachment management system

Allows storage of up to 18 different attachment presets and enables hydraulic flow (standard) and pressure (optional) to be adjusted according to requirements. Operators can change attachments quickly without manual setup.

Eco mode

For increased fuel efficiency eco mode has been added to the choice of work modes available. Choose the correct mode according to your working conditions for added versatility and increased performance.

Travel motor

New electronical, proportional control travel motor provides increased controllability for smoother downhill rides and when increasing speed while carrying a heavy load. For all models except 20Km/h version.

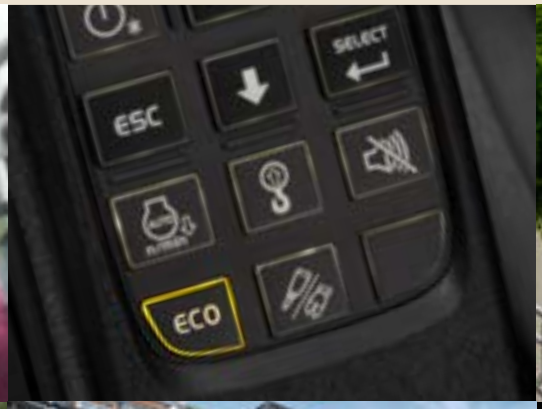

Tilt rotator

The optional tilt rotator acts as a wrist between the arm and bucket of the machine. It combines 360° rotary motion with 45° tilt action for flexibility and profitability.

Axle oscillation and lock

For increased off-road performance the front axle oscillation is 9° or 6° if mudguards are specified. Oscillation lock can be activated by the operator or automatically when 'Parking Mode' is selected.

Automatic idling system and automatic engine shut down

The idling system reduces rpm when the controls are inactive for a specified time (between 3-20 seconds). When the machine is stationary for the selected time the engine will automatically shut down – this is easily disabled and adjusted. Reduce fuel consumption and save money.

EASY TO MAINTAIN.

Serviceability is built in to the new EW160D. Easy access to grouped service points allows for fast and effortless maintenance and service checks. Increase your uptime with Volvo.

Grouped filters

Grouped filters in the pump compartment are accessible via one door at ground level for faster servicing and more machine uptime.

Fuel filler pump

Get more versatility from the fuel filler pump which allows for the machine to be re-filled from an external fuel tank. This provides 50l/min and an auto-stop function.

Service intervals on I-ECU

A service mode is incorporated into the I-ECU color monitor to enable diagnostic checks. Four separate service intervals – the engine oil/filter, fuel filter/water separator, hydraulic oil and hydraulic oil filter – are displayed on the monitor.

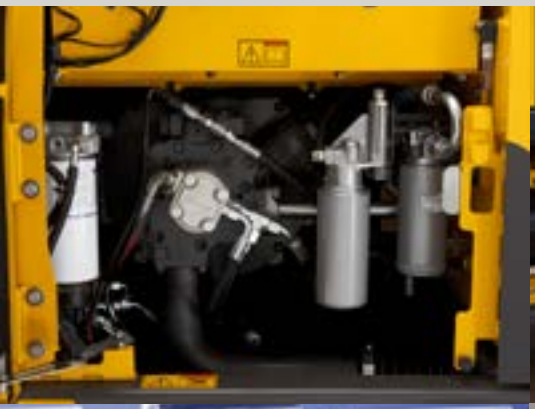

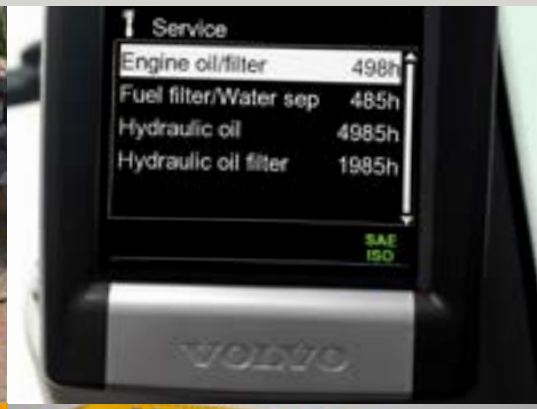

CareTrack

Volvo's telematics system guides machine owners towards optimized productivity and their next service – remotely. Get fuel consumption and location reports to save fuel and reduce costs.

Grouped greasing points

Conveniently located boom and arm greasing points are grouped for simplicity and ease of access. Greasing is needed at 50 hour intervals and at 250 hours for the slew ring. Quicker maintenance leads to increased productivity.

Cooling system

Cooling fan speed is controlled to its need which reduces fuel consumption and noise. The three coolers - change air cooler, water cooler and hydraulic cooler - form a single layer layout and are cooled by one fan for a more compact design, which is easy to service and clean – guaranteeing you more uptime.

Serviceability

Grouped filters and accessible radiators are quick to access from ground level via large compartment doors – increasing safety. Fast and easy access for maintenance means regular checks are more likely to be done leading to longer machine operating life.

THE COMPLETE PACKAGE.

Mono and two piece offset boom

The EW160D is available with either a mono boom or a two piece boom, both with or without offset, providing increased flexibility and versatility.

Performance

Perform at a higher level with increased digging force for greater productivity.

Auto greasing system

This optional feature supplies the correct amount of lubrication to all greasing points on a timed basis for reduced costs.

Higher working pressure

Reinforced digging equipment due to increased hydraulic pressure.

Eco mode

Work in Volvo's new eco mode for increased fuel efficiency.

Cab

Spacious cab with excellent all-round visibility and easy to access controls. Approved to ROPS safety standards.

Diesel Particulate Filter (DPF)

The active-type DPF incinerates exhaust fumes to lower emissions.

Stage IIIB/Tier 4 Interim engine

Volvo's efficient diesel engine with V-ACT technology gives you more power, while consuming less fuel for low emission levels.

Heavy counterweight

A 13% heavier counterweight for increased stability when using bulky attachments is available as an option for more versatility.

Serviceability

Grouped filters are quick and easy to access from ground level via large compartment doors for increased safety.

Travel motor

New electronical, proportional control travel motor provides increased controllability for a smoother downhill ride.

Quality

Volvo matched components and excellent features combine to produce a quality machine you can trust.

VOLVO EW160D IN DETAIL.

Engine

Volvo Construction Equipment is ready to comply with the tough new EU Stage IIIB and US (EPA) Tier 4 interim legislation for off-road vehicles with the introduction of a cascade of innovations in its new generation engines with Volvo Advanced combustion technology (V-ACT).
Volvo machines are equipped with Volvo designed and manufactured in-lline turbo charged diesel engine with high pressure unit injector system. The engine features an externally cooled exhaust gas re-circulation (E-EGR) and a Diesel Particulate Filter.

Engine		VOLVO D6H
Power out at	rpm	1 900
Gross (ISO 14396)	kW	115
	hp	156
Net (ISO 9249, DIN 6271)	kW	112
	hp	152
Max. torque at 1350 rpm	Nm	716
No. of cylinders		6
Displacement	l	5.7
Bore	mm	98
Stroke	mm	126

Electrical system

High-capacity electrical system that is well protected. Waterproof double-lock harness plugs are used to secure corrosion-free connections. The main relays and solenoid valves are shielded to prevent damage. The master switch is standard.

Voltage	V	24
Battery	V	2 x 12
Battery capacity	Ah	2 x 140
Alternator	A	28 V /120 A
Alternator rating	W	3 360

Undercarriage

Drive train: A variable axle piston motor in combination with a power shift gearbox supplies 3 speeds. The gearbox distributes than the energy via propeller shafts to the axles.
Framework: All-welded robust torsion box frame.
Wheels: Alternative single and twin wheels available.
Front axle: Robust excavator axle with automatic or operator controlled front axle oscillation lock.

Oscillating	°	± 9
with mudguards	°	± 6
Twin wheels		10.00–20
Max. tractive force (net)	kN	104
Travel speed:		
on road	km/h	20.0/30.0/35.0
off road	km/h	5.0/7.4/8.7
creep	km/h	4
Min. turning radius	m	7.3

Cab

New-design Volvo Care Cab with operator protective structure, large and roomy interior, more leg room and foot space. One way travel pedal with rocker switch control (F-N-R) on the right joystick. One-touch release for digging brake pedal. Audio system with remote control. 3 cup holders, 3 outlets, independently adjustable joystick consoles.
Excellent all-round visibility provided by maximized cab class, transparent roof hatch, 2-piece sliding door window and longstroke, easy to adjust and narrow steering column. The liftable front windshield can easily be stored in the inside roof space and clipped in postion. The removable lower front glass can be stored in the side door pocket. Interior lighting consists of one reading light and one light with timer. The pressurized and filtered cab air is supplied by a 14-vent climate-control providing fast defrosting and high cooling and heating performance. Viscous/spring mounted suspension cushions protect the operator from vibrations. Deluxe air-suspension seat with adjustable seat suspension, height, tilt, recline and forward-backward settings. (option)
Adjustable, easy to read 6.4" LCD color monitor provides real time information of machine functions and important diagnostic information and is switchable to rear view camera monitor.

Sound Level

In cab, acc. to ISO 6396	LpA dB(A)	70
External, acc. to ISO 6395	LwA dB(A)	101

(Directive 2000/14/EC)

Hydraulic system

Closed-centre load sensing hydraulic system with pressure compensated valves. Load independence of movements. Flow sharing feature, combined with a high flow electronically controlled pump (power regulation). The system gives superior manoeuvrability and fast movements, for optimal working result and economy.
The following working modes are included in the system:
Parking mode (P): Parking position for optimal safety.
Travel mode (T): Engine speed is controlled by travel pedal stroke for low fuel consumption and noise.
Working mode (W): Full working flow with adjustable engine rpm for normal working and best speed utilisation.
Customer mode (C): Operator can set proper oil flow in accordance with job conditions.
Power Boost: All digging and lifting forces are increased.

Hydraulic pumps:		
Max. flows:		
Main pump (type low noise axial piston pump)	l/min	256
Brake + steering pump (type low noise gear pump)	l/min	36
Servo pump (type low noise gear pump)	l/min	15
Max. pressure:		
Implements	MPa	34/37.5
Travel system	MPa	37.5
Pilot System	MPa	4

Brakes

Service brakes: servo-hydraulically manoeuvred self-adjusting wet multidiscs with two separate brake circuits.
Parking brake: negative wet disc in gear housing, spring applied and pressure released.
Digging brake: service brake with mechanical lock system.
Security system: The 2-circuit travel brakes are supplied with two accumulators in the event of failure in the service brake system.

Total machine weights

Machine with 5.0 m mono boom, 2.45 m dipper arm, quickfit S6, 530 kg /780 l bucket. Standard counterweight.		
Dozer blade front and outriggers rear	kg	17 250
Dozer blade rear only	kg	16 200
Front and rear outriggers	kg	17 500
Machine with 5.1m 2-piece boom, 2.45 m dipper arm, quickfit S6, 530 kg /780 l bucket. Standard counterweight		
Dozer blade front and outriggers rear	kg	17 600
Dozer blade rear only	kg	16 550
Front and rear outriggers	kg	17 850

Service refill capacities

Fuel tank	l	250
Hydraulic system, total	l	260
Hydraulic tank	l	123
Engine oil	l	25
Engine coolant	l	33
Transmission	l	2.5
Axel differential:		
Front axle	l	9.5
Rear axle	l	12.5
Final drive, wet disc type	l	4 x 2.5

Slew system

The superstructure is slewed by the means of a radial piston motor without reduction gear.
Automatic slew holding brake and anti-rebound valve are standard.

Max slew speed	rpm	10
Max. slew torque	kNm	50.4

DIMENSIONS.

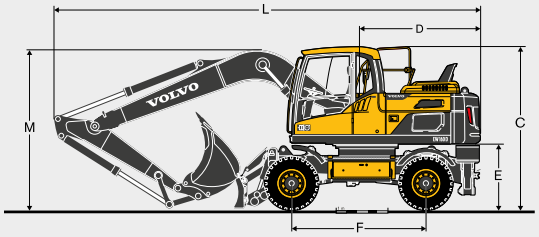

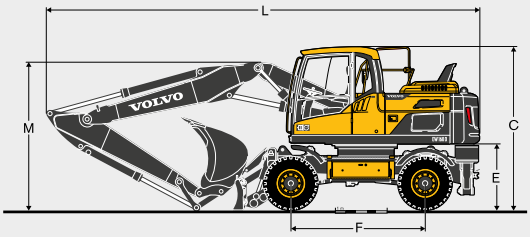

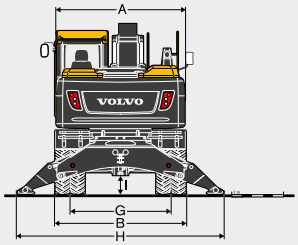

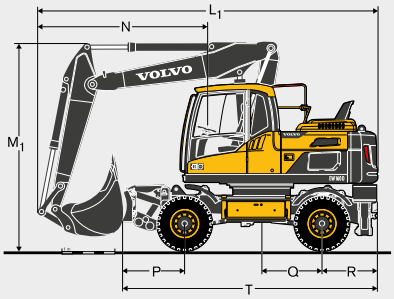

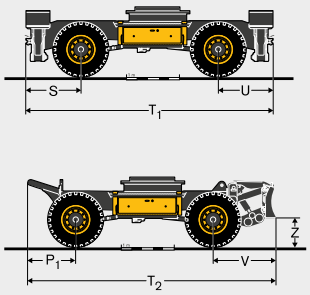

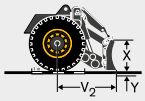

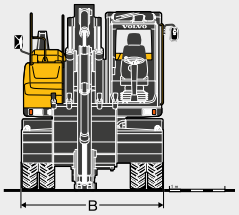

Description		Unit	Mono boom	2-piece boom	Mono offset boom	2-piece offset boom
		m	5.0	5.1	4.75	5.2
A	Overall width of superstructure	mm	2 520	2 520	2 520	2 520
B	Overall width/optional	mm	2 540/2 750	2 540/2 750	2 540/2 750	2 540/2 750
C	Overall height of cab	mm	3 140	3 140	3 140	3 140
D	Tail slew radius	mm	2 150	2 150	2 150	2 150
E	Counterweight clearance	mm	1 260	1 260	1 260	1 260
F	Wheel base	mm	2 600	2 600	2 600	2 600
G	Tread	mm	1 940	1 940	1 940	1 940
H	Outrigger width (front or rear)	mm	3 980	3 980	3 980	3 980
I	Min. ground clearance	mm	360	360	360	360

Description		Unit	Mono boom					2-piece boom				
		m	5.0					5.1				
			Arm				Grab Arm	Arm				Grab Arm
		m	2.0	2.45	2.6	3.1	2.95*	2.0	2.45	2.6	3.1	2.95*
L	Overall length	mm	8 240	8 250	8 240	7 940	8 255*	8 330	8 360	8 360	8 150	8 350*
M	Overall height of boom	mm	3 070	3 040	3 200	3 700	3 155*	2 865	2 860	2 900	3 390	2 950*
L_1	Overall length	mm						6 440	6 440	5 960**	5 950**	6 900*
M_1	Overall height of boom	mm						3 920	3 920	3 920**	3 940**	3 990*
N	Front overhang	mm						3 200	3 215	2 715**	2 710**	3 660*

Description		Unit	Mono offset boom				2-piece offset boom			
		m	4.75				5.2			
			Arm				Arm			
		m	2.0	2.45	2.6	3.1	2.0	2.45	2.6	3.1
L	Overall length	mm	7 990	7 845	7 845	7 600	8 460	8 450	8 450	8 220
M	Overall height of boom	mm	3 000	3 510	3 510	3 895	2 750	2 800	2 870	3 390
L_1	Overall length	mm					6 220	6 260	6 280	6 180**
M_1	Overall height of boom	mm					3 980	3 980	3 980	4 000**
N	Front overhang	mm					2 980	3 020	3 040	2 950**

*grab arm, without clamshell bucket

** without bucket

Description	Unit	Undercarriage dimensions
P	mm	1 180
P_1	mm	750
Q	mm	1 150
R/U	mm	1 030
S	mm	1 080
T	mm	4 800
T_1	mm	4 700

Description	Unit	Undercarriage dimensions
T_2	mm	4 470
V	mm	1 120
V_2	mm	920
X	mm	630
Y	mm	153
Z	mm	520

WORKING RANGES & DIGGING FORCES.

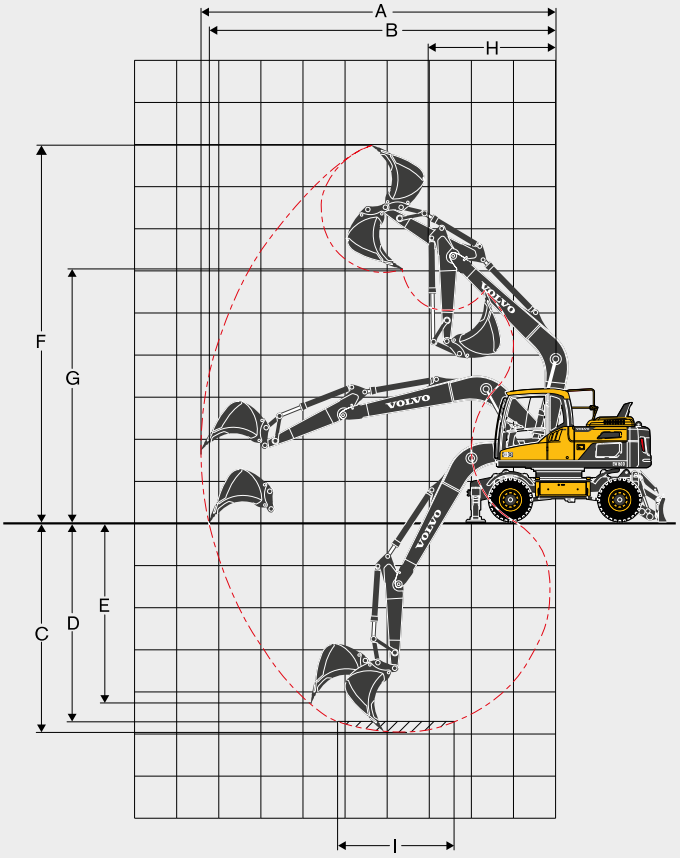

Mono boom 5.0 m and dipper arm 2.0 m, 2.45 m, 2.6 m, 3.1 m

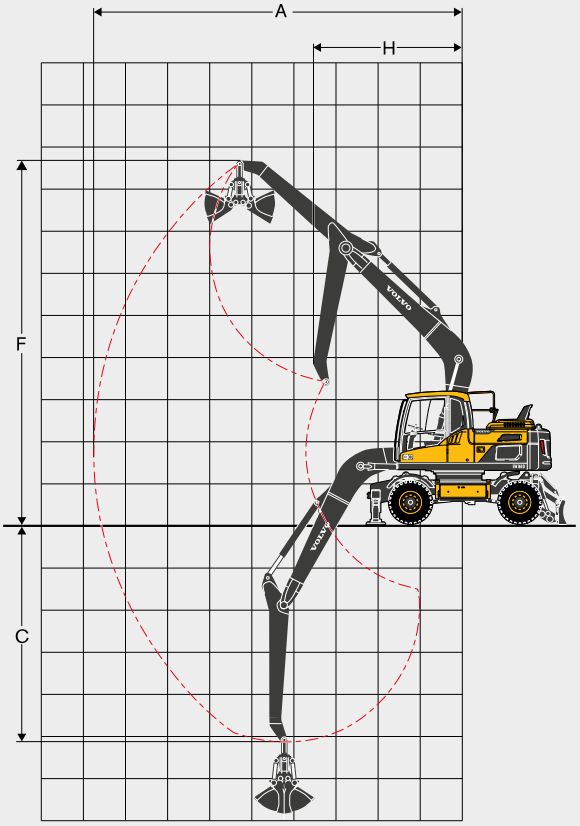

Monoboom 5.0 m and grab arm 2.95 m

Description		Unit	Mono boom				
		m	5.0				
			Arm				Grab arm
		m	2.0	2.45	2.6	3.1	2.95*
A	Max. digging reach	mm	8 600	9 030	9 170	9 650	8 050
B	Max. digging reach on ground	mm	8 400	8 840	8 990	9 470	
C	Max. digging depth	mm	5 160	5 610	5 760	6 260	4 590
D	Max. digging depth (I = 2 440 mm level)	mm	4 940	5 420	5 570	6 100	
E	Max. vertical wall digging depth	mm	4 200	4 710	4 850	5 320	
F	Max. cutting height	mm	8 840	9 100	9 190	9 470	8 090
G	Max. dumping height	mm	5 950	6 190	6 270	6 560	
H	Min. front slew radius	mm	3 140	3 150	3 160	3 190	3 270
Digging forces with direct fit bucket							
Breakout force - bucket	(ISO)	kN	127.7*	127.7*	127.7*	127.7*	
Tearout force	(ISO)	kN	97*	85*	82*	72*	*with Power boost
Max. recommended sizes for direct fit buckets							
GP-Bucket (1.8 t/m³)		l	1 000	870	870	780	
HD-Bucket (2.1 t/m³)		l	700	700	700	620	
Max. recommended sizes for quick fit buckets							
S6/S60 QF GP-Bucket (1.8 t/m³)		l	870	780	780	700	
S6 QF HD-Bucket (2.1 t/m³)		l	700	700	620	500	
S1 QF GP-Bucket (1.8 t/m³)		l	870	780	700	620	
S1 QF HD-Bucket (2.1 t/m³)		l	700	620	620	360	

Note: 1. Bucket size based on SAE-J296, heaped material with a 1:1 angle of repose. | 2. “Max permitted sizes” are for reference only and are not necessarily available from the factory. | 3. “Max permitted sizes” are for heavy counterweight.

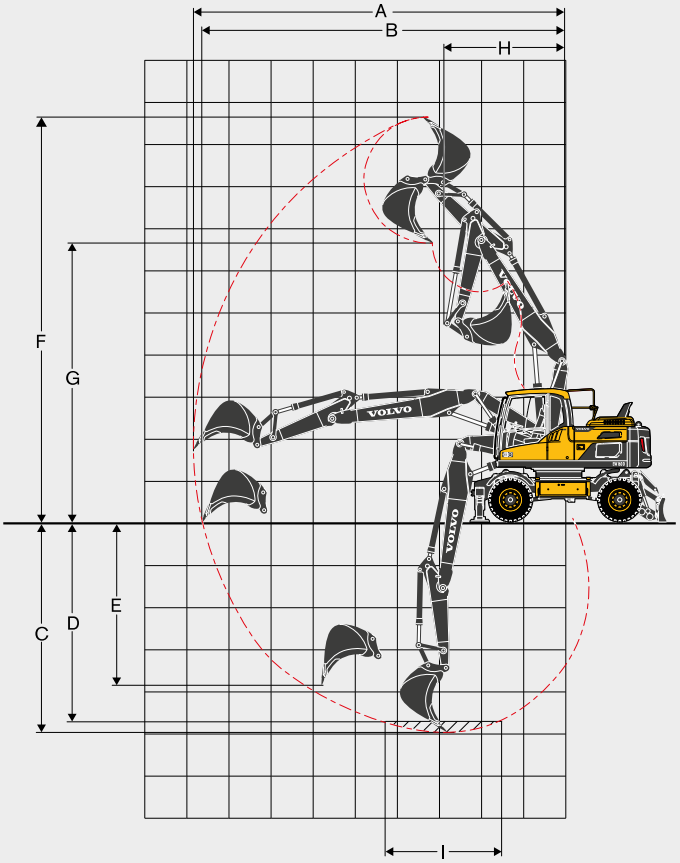

2-piece boom 5.1 m and dipper arm 2.0 m, 2.45 m, 2.6 m, 3.1 m

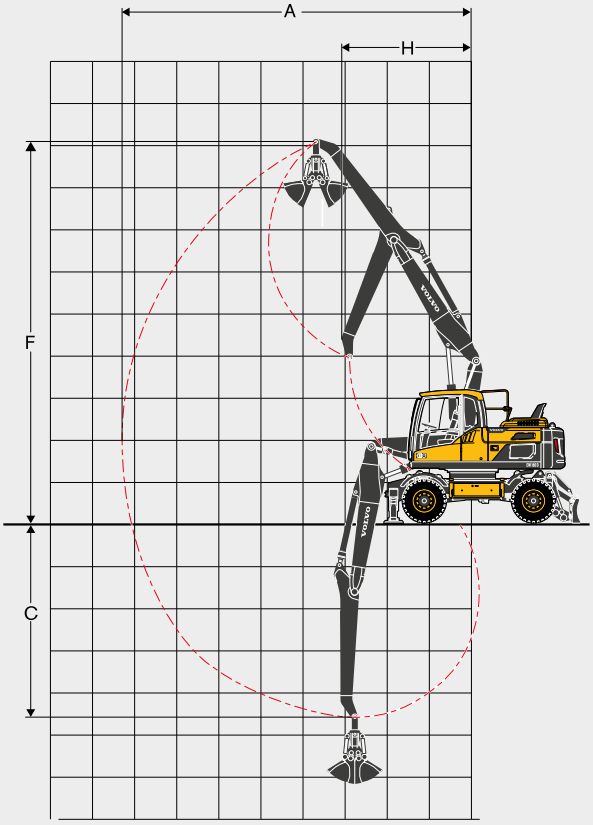

2-piece boom 5.1 m and grab arm 2.95 m

Description		Unit	2-piece boom				
		m	5.1				
			Arm				Grab arm
		m	2.0	2.45	2.6	3.1	2.95*
A	Max. digging reach	mm	8 750	9 180	9 320	9 810	8 190
B	Max. digging reach on ground	mm	8 550	8 990	9 140	9 630	
C	Max. digging depth	mm	5 150	5 600	5 750	6 250	4 590
D	Max. digging depth (I = 2 440 mm level)	mm	5 040	5 500	5 650	6 150	
E	Max. vertical wall digging depth	mm	3 890	4 360	4 500	4 970	
F	Max. cutting height	mm	9 660	10 000	10 110	10 480	9 000
G	Max. dumping height	mm	6 650	6 980	7 090	7 460	
H	Min. front slew radius	mm	2 690	2 820	2 860	3 000	3 010
Digging forces with direct fit bucket							
Breakout force - bucket	(ISO)	kN	127.7*	127.7*	127.7*	127.7*	
Tearout force	(ISO)	kN	97*	85*	82*	72*	*with Power boost
Max. recommended sizes for direct fit buckets							
GP-Bucket (1.8 t/m³)		l	870	870	780	700	
HD-Bucket (2.1 t/m³)		l	700	700	700	620	
Max. recommended sizes for quick fit buckets							
S6/S60 QF GP-Bucket (1.8 t/m³)		l	870	780	780	700	
S6 QF HD-Bucket (2.1 t/m³)		l	700	620	620	500	
S1 QF GP-Bucket (1.8 t/m³)		l	870	700	700	620	
S1 QF HD-Bucket (2.1 t/m³)		l	700	620	620	360	

Note: 1. Bucket size based on SAE-J296, heaped material with a 1:1 angle of repose. | 2. “Max permitted sizes” are for reference only and are not necessarily available from the factory. | 3. “Max permitted sizes” are for heavy counterweight.

WORKING RANGES & DIGGING FORCES.

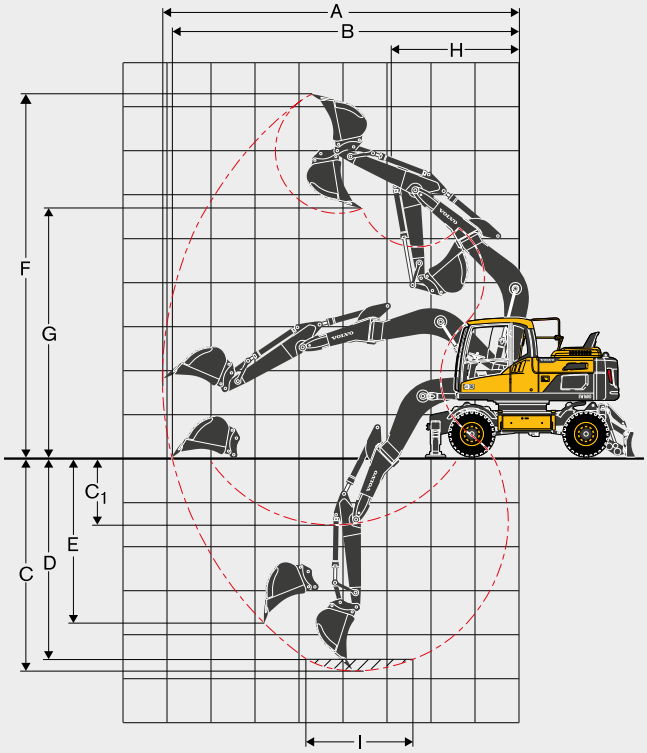

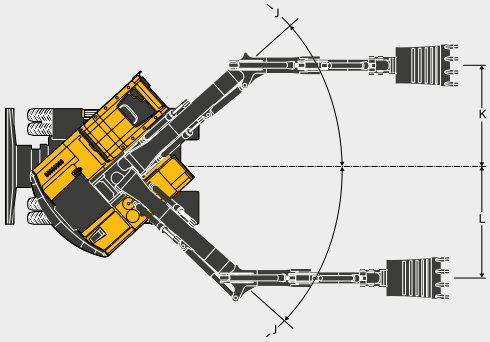

Mono offset boom 4.75 m and dipper arm 2.0 m, 2.45 m, 2.6 m, 3.1 m

Description		Unit	Mono offset boom			
		m	4.75			
			Arm			
		m	2.0	2.45	2.6	3.1
A	Max. digging reach	mm	8 160	8 570	8 710	9 170
B	Max. digging reach on ground	mm	7 960	8 370	8 510	8 990
C	Max. digging depth	mm	4 860	5 310	5 470	5 960
C_1	Max. digging depth at max. attachment offset with vertical trench walls	mm	1 490	1 940	2 090	2 590
D	Max. digging depth (I = 2 440 mm level)	mm	4 610	5 090	5 250	5 780
E	Max. vertical wall digging depth	mm	3 800	4 230	4 370	4 850
F	Max. cutting height	mm	8 270	8 470	8 530	8 760
G	Max. dumping height	mm	5 610	5 770	5 930	6 110
H	Min. front slew radius	mm	2 940	2 920	2 910	2 960
J		°	41.7			
K		mm	2 420			
L		mm	2 200			
Digging forces with direct fit bucket						
Breakout force - bucket	(ISO)	kN	108	108	108	108
Tearout force	(ISO)	kN	73	63.5	61	53.5
Max. recommended sizes for direct fit buckets						
GP-Bucket (1.8 t/m³)		l	870	780	780	700
HD-Bucket (2.1 t/m³)		l	620	620	620	500
Max. recommended sizes for quick fit buckets						
S6/S60 QF GP-Bucket (1.8 t/m³)		l	780	700	700	620
S6 QF HD-Bucket (2.1 t/m³)		l	620	620	500	360
S1 QF GP-Bucket (1.8 t/m³)		l	780	700	620	500
S1 QF HD-Bucket (2.1 t/m³)		l	620	500	500	360

Note: 1. Bucket size based on SAE-J296, heaped material with a 1:1 angle of repose. | 2. “Max permitted sizes” are for reference only and are not necessarily available from the factory. | 3. “Max permitted sizes” are for heavy counterweight.

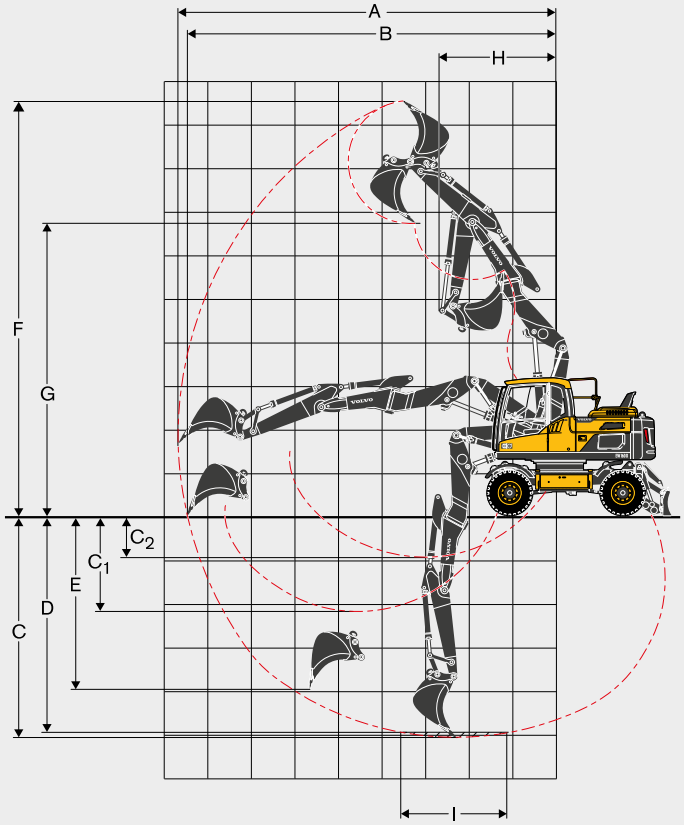

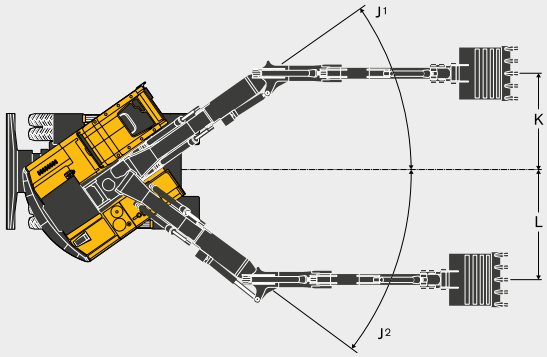

2-piece offset boom 5.2 m and dipper arm 2.0 m, 2.45 m, 2.6 m, 3.1 m

Description		Unit	2-piece offset boom			
		m	5.2			
			Arm			
		m	2.0	2.45	2.6	3.1
A	Max. digging reach	mm	8 740	9 170	9 310	9 790
B	Max. digging reach on ground	mm	8 550	8 980	9 130	9 610
C	Max. digging depth	mm	5 180	5 630	5 780	6 280
C_1	Max. digging depth at max. attachment offset with vertical trench walls	mm	2 270	2 720	2 870	3 370
C_2	Min. digging depth at max. attachment offset with vertical trench walls	mm	1 020	1 470	1 620	2 120
D	Max. digging depth (I = 2 440 mm level)	mm	5 080	5 530	5 680	6 180
E	Max. vertical wall digging depth	mm	4 080	4 520	4 660	5 140
F	Max. cutting height	mm	9 570	9 880	9 980	10 330
G	Max. dumping height	mm	6 720	7 030	7 130	7 480
H	Min. front slew radius	mm	2 710	2 810	2 840	2 950
J_1		°	35			
J_2		°	36			
K		mm	2 120			
L		mm	2 430			
Digging forces with direct fit bucket						
Breakout force - bucket	(ISO)	kN	108	108	108	108
Tearout force	(ISO)	kN	73	63.5	61	53.5
Max. recommended sizes for direct fit buckets						
GP-Bucket (1.8 t/m³)		l	780	780	700	620
HD-Bucket (2.1 t/m³)		l	620	620	620	500
Max. recommended sizes for quick fit buckets						
S6/S60 QF GP-Bucket (1.8 t/m³)		l	780	700	700	620
S6 QF HD-Bucket (2.1 t/m³)		l	620	500	500	360
S1 QF GP-Bucket (1.8 t/m³)		l	620	620	620	500
S1 QF HD-Bucket (2.1 t/m³)		l	620	500	500	360

Note: 1. Bucket size based on SAE-J296, heaped material with a 1:1 angle of repose. | 2. “Max permitted sizes” are for reference only and are not necessarily available from the factory. | 3. “Max permitted sizes” are for heavy counterweight.

SPECIFICATIONS.

LIFTING CAPACITY

At the arm end, without bucket and quick fit. Unit: 1 000 kg.
For lifting capacity including bucket/quick fit, simply subtract actual weight of those parts from the following values. With heavy counterweight.

Across under-carriage / Along under-carriage	Arm end (bucket pivot) related to ground level	Reach from machine centre (u = support up/d = support down)																								
		1.5 m				3 m				4.5 m				6 m				7.5 m				Max.				Max.
		u	d	u	d	u	d	u	d	u	d	u	d	u	d	u	d	u	d	u	d	u	d	u	d	m
5.0 m mono boom 2.0 m dipper arm Front dozer blade Rear outriggers	7.5 m	-	-	-	-	-	-	-	-	-	-	-	-	-	-	-	-	-	-	-	-	-	-	-	-	-
	6 m	-	-	-	-	-	-	-	-	-	-	-	-	-	-	-	-	-	-	-	-	3.1	4.0*	4.0*	4.0*	5.7
	4.5 m	-	-	-	-	-	-	-	-	4.3	5.3*	5.3*	5.3*	2.8	4.6	4.2	4.7*	-	-	-	-	2.4	3.8*	3.7	3.8*	6.5
	3 m	-	-	-	-	-	-	-	-	4.0	6.6*	6.4	6.6*	2.6	4.5	4.1	5.2*	-	-	-	-	2.1	3.6	3.3	3.9*	7.0
	1.5 m	-	-	-	-	-	-	-	-	3.7	6.7	6.1	7.7*	2.5	4.4	4.0	5.7*	-	-	-	-	2.0	3.4	3.1	4.1*	7.1
	0 m	-	-	-	-	-	-	-	-	3.6	6.5	5.9	8.2*	2.5	4.3	3.9	6.0*	-	-	-	-	2.1	3.6	3.3	4.7*	6.8
	-1.5 m	-	-	-	-	6.5	11.4*	11.4*	11.4*	3.6	6.5	5.9	7.9*	2.4	4.3	3.9	5.7*	-	-	-	-	2.3	4.1	3.7	5.4*	6.2
	-3 m	-	-	-	-	6.7	9.4*	9.4*	9.4*	3.7	6.6*	6.0	6.6*	-	-	-	-	-	-	-	-	3.1	5.5*	5.0	5.5*	5.1
	-4.5 m	-	-	-	-	-	-	-	-	-	-	-	-	-	-	-	-	-	-	-	-	-	-	-	-	-
5.0 m mono boom 2.45 m dipper arm Front dozer blade Rear outriggers	7.5 m	-	-	-	-	-	-	-	-	-	-	-	-	-	-	-	-	-	-	-	-	3.7*	3.7*	3.7*	3.7*	4.8
	6 m	-	-	-	-	-	-	-	-	-	-	-	-	2.8	4.0*	4.0*	4.0*	-	-	-	-	2.7	3.2*	3.2*	3.2*	6.2
	4.5 m	-	-	-	-	-	-	-	-	4.3	4.8*	4.8*	4.8*	2.8	4.3*	4.3	4.3*	-	-	-	-	2.1	3.0*	3.0*	3.0*	7.0
	3 m	-	-	-	-	-	-	-	-	4.0	6.1*	6.1*	6.1*	2.6	4.5	4.1	4.9*	-	-	-	-	1.9	3.1*	3.0	3.1*	7.4
	1.5 m	-	-	-	-	-	-	-	-	3.7	6.7	6.1	7.4*	2.5	4.3	4.0	5.5*	1.8	3.1	2.9	3.3*	1.8	3.1	2.9	3.2*	7.5
	0 m	-	-	-	-	6.0*	6.0*	6.0*	6.0*	3.6	6.5	5.9	8.1*	2.4	4.2	3.9	5.9*	-	-	-	-	1.9	3.2	2.9	3.6*	7.3
	-1.5 m	6.2*	6.2*	6.2*	6.2*	6.4	10.9*	10.9*	10.9*	3.5	6.5	5.9	8.0*	2.4	4.2	3.8	5.8*	-	-	-	-	2.1	3.6	3.3	4.4*	6.7
	-3 m	-	-	-	-	6.5	10.3*	10.3*	10.3*	3.6	6.5	5.9	7.1*	-	-	-	-	-	-	-	-	2.6	4.6	4.2	5.2*	5.7
	-4.5 m	-	-	-	-	-	-	-	-	-	-	-	-	-	-	-	-	-	-	-	-	-*	-	-*	-*	-
5.0 m mono boom 2.6 m dipper arm Front dozer blade Rear outriggers	7.5 m	-	-	-	-	-	-	-	-	-	-	-	-	-	-	-	-	-	-	-	-	3.4*	3.4*	3.4*	3.4*	5.0
	6 m	-	-	-	-	-	-	-	-	-	-	-	-	2.8	4.0*	4.0*	4.0*	-	-	-	-	2.5	2.9*	2.9*	2.9*	6.4
	4.5 m	-	-	-	-	-	-	-	-	4.4	4.6*	4.6*	4.6*	2.8	4.2*	4.2*	4.2*	-	-	-	-	2.1	2.8*	2.8*	2.8*	7.2
	3 m	-	-	-	-	-	-	-	-	4.0	5.9*	5.9*	5.9*	2.6	4.5	4.1	4.8*	1.9	3.2	2.9	3.3*	1.8	2.8*	2.8*	2.8*	7.6
	1.5 m	-	-	-	-	-	-	-	-	3.7	6.7	6.1	7.2*	2.5	4.3	4.0	5.4*	1.8	3.1	2.8	4.1*	1.7	3.0*	2.8	3.0*	7.6
	0 m	-	-	-	-	6.2*	6.2*	6.2*	6.2*	3.5	6.5	5.9	8.0*	2.4	4.2	3.9	5.8*	-	-	-	-	1.8	3.1	2.8	3.4*	7.4
	-1.5 m	6.0*	6.0*	6.0*	6.0*	6.3	10.5*	10.5*	10.5*	3.5	6.4	5.8	8.1*	2.4	4.2	3.8	5.9*	-	-	-	-	2.0	3.5	3.2	4.1*	6.9
	-3 m	-	-	-	-	6.4	10.6*	10.6*	10.6*	3.5	6.5	5.9	7.2*	-	-	-	-	-	-	-	-	2.5	4.4	4.0	5.1*	5.9
	-4.5 m	-	-	-	-	-	-	-	-	-	-	-	-	-	-*	-*	-*	-	-	-	-	-	-	-*	-*	-
5.0 m mono boom 3.1 m dipper arm Front dozer blade Rear outriggers	7.5 m	-	-	-	-	-	-	-	-	-	-	-	-	-	-	-	-	-	-	-	-	2.6*	2.6*	2.6*	2.6*	5.7
	6 m	-	-	-	-	-	-	-	-	-	-	-	-	2.9	3.5*	3.5*	3.5*	-	-	-	-	2.2	2.4*	2.4*	2.4*	6.9
	4.5 m	-	-	-	-	-	-	-	-	-	-	-	-	2.8	3.8*	3.8*	3.8*	1.9	2.9*	2.9*	2.9*	1.8	2.3*	2.3*	2.3*	7.7
	3 m	-	-	-	-	7.6	7.7*	7.7*	7.7*	4.1	5.3*	5.3*	5.3*	2.7	4.4*	4.2	4.4*	1.9	3.2	2.9	4.0*	1.6	2.3*	2.3*	2.3*	8.0
	1.5 m	-	-	-	-	-	-	-	-	3.8	6.8*	6.2	6.8*	2.5	4.4	4.0	5.1*	1.8	3.1	2.8	4.3*	1.6	2.4*	2.4*	2.4*	8.1
	0 m	-	-	-	-	6.3	6.6*	6.6*	6.6*	3.5	6.5	5.9	7.8*	2.4	4.2	3.8	5.7*	1.7	3.0	2.8	4.5*	1.6	2.7*	2.6	2.7*	7.9
	-1.5 m	5.3*	5.3*	5.3*	5.3*	6.2	9.6*	9.6*	9.6*	3.4	6.4	5.8	8.1*	2.3	4.1	3.8	5.9*	-	-	-	-	1.7	3.1	2.8	3.1*	7.4
	-3 m	9.0*	9.0*	9.0*	9.0*	6.3	11.3*	11.3*	11.3*	3.5	6.4	5.8	7.6*	2.3	4.2	3.8	5.4*	-	-	-	-	2.1	3.7	3.4	4.2*	6.5
	-4.5 m	-	-	-	-	6.6	8.6*	8.6*	8.6*	3.6	5.7*	5.7*	5.7*	-	-	-	-	-	-	-	-	3.2	4.8*	4.8*	4.8*	4.9
5.0 m mono boom 2.95 m dipper arm for grab Front dozer blade Rear outriggers	7.5 m	-	-	-	-	-	-	-	-	-	-	-	-	-	-	-	-	-	-	-	-	3.2*	3.2*	3.2*	3.2*	5.6
	6 m	-	-	-	-	-	-	-	-	-	-	-	-	3.1	4.0*	4.0*	4.0*	-	-	-	-	2.5	2.8*	2.8*	2.8*	6.8
	4.5 m	-	-	-	-	-	-	-	-	-	-	-	-	3.0	4.2*	4.2*	4.2*	2.1	3.1*	3.1*	3.1*	2.1	2.7*	2.7*	2.7*	7.6
	3 m	-	-	-	-	-	-	-	-	4.3	5.8*	5.8*	5.8*	2.9	4.8	4.4	4.8*	2.1	3.4	3.2	4.4*	1.9	2.7*	2.7*	2.7*	8.0
	1.5 m	-	-	-	-	-	-	-	-	4.0	7.0	6.4	7.2*	2.8	4.6	4.2	5.5*	2.0	3.3	3.1	4.7*	1.8	2.8*	2.8	2.8*	8.0
	0 m	-	-	-	-	6.1*	6.1*	6.1*	6.1*	3.8	6.8	6.2	8.2*	2.6	4.5	4.1	6.0*	2.0	3.3	3.0	4.9*	1.9	3.0*	2.9	3.0*	7.8
	-1.5 m	5.3*	5.3*	5.3*	5.3*	6.6	9.6*	9.6*	9.6*	3.7	6.7	6.1	8.4*	2.6	4.4	4.0	6.2*	-	-	-	-	2.0	3.4	3.1	3.5*	7.3
	-3 m	9.3*	9.3*	9.3*	9.3*	6.7	11.4*	11.4*	11.4*	3.8	6.7	6.1	7.8*	2.6	4.4	4.1	5.6*	-	-	-	-	2.4	4.1	3.8	4.5*	6.4
	-4.5 m	-	-	-	-	-	-	-	-	3.9	5.6*	5.6*	5.6*	-	-	-	-	-	-	-	-	3.8	5.4*	5.4*	5.4*	4.6
5.0 m mono boom 2.0 m dipper arm Outriggers front and rear	7.5 m	-	-	-	-	-	-	-	-	-	-	-	-	-	-	-	-	-	-	-	-	-	-	-	-	-
	6 m	-	-	-	-	-	-	-	-	-	-	-	-	-	-	-	-	-	-	-	-	3.1	4.0*	4.0*	4.0*	5.7
	4.5 m	-	-	-	-	-	-	-	-	4.3	5.3*	5.3*	5.3*	2.8	4.7*	4.2	4.7*	-	-	-	-	2.4	3.8*	3.7	3.8*	6.5
	3 m	-	-	-	-	-	-	-	-	4.0	6.6*	6.4	6.6*	2.7	5.2*	4.1	5.2*	-	-	-	-	2.1	3.9*	3.2	3.9*	7.0
	1.5 m	-	-	-	-	-	-	-	-	3.8	7.7*	6.1	7.7*	2.6	5.6	4.0	5.7*	-	-	-	-	2.0	4.1*	3.1	4.1*	7.1
	0 m	-	-	-	-	-	-	-	-	3.6	8.2*	5.9	8.2*	2.5	5.5	3.9	6.0*	-	-	-	-	2.1	4.6	3.2	4.7*	6.8
	-1.5 m	-	-	-	-	6.6	11.4*	11.4*	11.4*	3.6	7.9*	5.9	7.9*	2.5	5.5	3.9	5.7*	-	-	-	-	2.4	5.2	3.7	5.4*	6.2
	-3 m	-	-	-	-	6.8	9.4*	9.4*	9.4*	3.7	6.6*	6.0	6.6*	-	-	-	-	-	-	-	-	3.2	5.5*	5.0	5.5*	5.1
	-4.5 m	-	-	-	-	-	-	-	-	-	-	-	-	-	-	-	-	-	-	-	-	-	-	-	-	-

Notes:
1. Working pressure with Power Boost = 37.5 MPa.
2. The above values are in compliance with ISO standard 10 567. They do not exceed 87 % of hydraulic lifting capacity or 75 % of tipping load, with the machine on firm, level ground.
3. Load capacities marked with an asterisk (*) are limited by machine's hydraulic lifting capacity rather than tipping load.

LIFTING CAPACITY

At the arm end, without bucket and quick fit. Unit: 1 000 kg.
For lifting capacity including bucket/quick fit, simply subtract actual weight of those parts from the following values. With heavy counterweight.

Across under-carriage / Along under-carriage	Arm end (bucket pivot) related to ground level	Reach from machine centre (u = support up/d = support down)																								
		1.5 m				3 m				4.5 m				6 m				7.5 m				Max.				Max.
		u	d	u	d	u	d	u	d	u	d	u	d	u	d	u	d	u	d	u	d	u	d	u	d	m
5.0 m mono boom 2.45 m dipper arm Outriggers front and rear	7.5 m	-	-	-	-	-	-	-	-	-	-	-	-	-	-	-	-	-	-	-	-	3.7*	3.7*	3.7*	3.7*	4.8
	6 m	-	-	-	-	-	-	-	-	-	-	-	-	2.8	4.0*	4.0*	4.0*	-	-	-	-	2.7	3.2*	3.2*	3.2*	6.2
	4.5 m	-	-	-	-	-	-	-	-	4.4	4.8*	4.8*	4.8*	2.8	4.3*	4.2	4.3*	-	-	-	-	2.2	3.0*	3.0*	3.0*	7.0
	3 m	-	-	-	-	-	-	-	-	4.1	6.1*	6.1*	6.1*	2.7	4.9*	4.1	4.9*	-	-	-	-	1.9	3.1*	2.9	3.1*	7.4
	1.5 m	-	-	-	-	-	-	-	-	3.8	7.4*	6.1	7.4*	2.5	5.5*	4.0	5.5*	1.8	3.3*	2.8	3.3*	1.8	3.2*	2.8	3.2*	7.5
	0 m	-	-	-	-	6.0*	6.0*	6.0*	6.0*	3.6	8.1*	5.9	8.1*	2.4	5.5	3.8	5.9*	-	-	-	-	1.9	3.6*	2.9	3.6*	7.3
	-1.5 m	6.2 *	6.2 *	6.2 *	6.2 *	6.4	10.9*	10.9*	10.9*	3.6	8.0*	5.8	8.0*	2.4	5.4	3.8	5.8*	-	-	-	-	2.1	4.4*	3.3	4.4*	6.7
	-3 m	-	-	-	-	6.6	10.3*	10.3*	10.3*	3.6	7.1*	5.9	7.1*	-	-	-	-	-	-	-	-	2.7	5.2*	4.2	5.2*	5.7
	-4.5 m	-	-	-	-	-	-	-	-	-	-	-	-	-	-	-	-	-	-	-	-	-	-	-	-	-
5.0 m mono boom 2.6 m dipper arm Outriggers front and rear	7.5 m	-	-	-	-	-	-	-	-	-	-	-	-	-	-	-	-	-	-	-	-	3.4*	3.4*	3.4*	3.4*	5.0
	6 m	-	-	-	-	-	-	-	-	-	-	-	-	2.9	4.0*	4.0*	4.0*	-	-	-	-	2.6	2.9*	2.9*	2.9*	6.4
	4.5 m	-	-	-	-	-	-	-	-	4.4	4.6*	4.6*	4.6*	2.8	4.2*	4.2*	4.2*	-	-	-	-	2.1	2.8*	2.8*	2.8*	7.2
	3 m	-	-	-	-	-	-	-	-	4.1	5.9*	5.9*	5.9*	2.7	4.8*	4.1	4.8*	1.9	3.3*	2.9	3.3*	1.9	2.8*	2.8*	2.8*	7.6
	1.5 m	-	-	-	-	-	-	-	-	3.8	7.2*	6.1	7.2*	2.5	5.4*	3.9	5.4*	1.8	4.0	2.8	4.1*	1.8	3.0*	2.7	3.0*	7.6
	0 m	-	-	-	-	6.2*	6.2*	6.2*	6.2*	3.6	8.0*	5.9	8.0*	2.4	5.5	3.8	5.8*	-	-	-	-	1.8	3.4*	2.8	3.4*	7.4
	-1.5 m	6.0 *	6.0 *	6.0 *	6.0 *	6.4	10.5*	10.5*	10.5*	3.5	8.1*	5.8	8.1*	2.4	5.4	3.8	5.9*	-	-	-	-	2.0	4.1*	3.2	4.1*	6.9
	-3 m	-	-	-	-	6.5	10.6*	10.6*	10.6*	3.6	7.2*	5.9	7.2*	-	-	-	-	-	-	-	-	2.5	5.1*	4.0	5.1*	5.9
	-4.5 m	-	-	-	-	-	-	-	-	-	-	-	-	-	-*	-*	-*	-	-	-	-	-	-	-	-	-
5.0 m mono boom 3.1 m dipper arm Outriggers front and rear	7.5 m	-	-	-	-	-	-	-	-	-	-	-	-	-	-	-	-	-	-	-	-	2.6*	2.6*	2.6*	2.6*	5.7
	6 m	-	-	-	-	-	-	-	-	-	-	-	-	2.9	3.5*	3.5*	3.5*	-	-	-	-	2.2	2.4*	2.4*	2.4*	6.9
	4.5 m	-	-	-	-	-	-	-	-	-	-	-	-	2.8	3.8*	3.8*	3.8*	1.9	2.9*	2.9*	2.9*	1.9	2.3*	2.3*	2.3*	7.7
	3 m	-	-	-	-	7.7	7.7*	7.7*	7.7*	4.2	5.3*	5.3*	5.3*	2.7	4.4*	4.1	4.4*	1.9	4.0*	2.9	4.0*	1.7	2.3*	2.3*	2.3*	8.0
	1.5 m	-	-	-	-	-	-	-	-	3.8	6.8*	6.1	6.8*	2.5	5.1*	4.0	5.1*	1.8	4.0	2.8	4.3*	1.6	2.4*	2.4*	2.4*	8.1
	0 m	-	-	-	-	6.4	6.6*	6.6*	6.6*	3.6	7.8*	5.9	7.8*	2.4	5.5	3.8	5.7*	1.8	3.9	2.8	4.5*	1.6	2.7*	2.6	2.7*	7.9
	-1.5 m	5.3 *	5.3 *	5.3 *	5.3 *	6.3	9.6*	9.6*	9.6*	3.5	8.1*	5.8	8.1*	2.3	5.4	3.8	5.9*	-	-	-	-	1.8	3.1*	2.8	3.1*	7.4
	-3 m	9.0 *	9.0 *	9.0 *	9.0 *	6.4	11.3*	11.3*	11.3*	3.5	7.6*	5.8	7.6*	2.4	5.4	3.8	5.4*	-	-	-	-	2.2	4.2*	3.4	4.2*	6.5
	-4.5 m	-	-	-	-	6.7	8.6*	8.6*	8.6*	3.7	5.7*	5.7*	5.7*	-	-	-	-	-	-	-	-	3.2	4.8*	4.8*	4.8*	4.9
5.0 m mono boom 2.95 m dipper arm for grab Outriggers front and rear	7.5 m	-	-	-	-	-	-	-	-	-	-	-	-	-	-	-	-	-	-	-	-	3.2*	3.2*	3.2*	3.2*	5.6
	6 m	-	-	-	-	-	-	-	-	-	-	-	-	3.1	4.0*	4.0*	4.0*	-	-	-	-	2.5	2.8*	2.8*	2.8*	6.8
	4.5 m	-	-	-	-	-	-	-	-	-	-	-	-	3.1	4.2*	4.2*	4.2*	2.2	3.1*	3.1*	3.1*	2.1	2.7*	2.7*	2.7*	7.6
	3 m	-	-	-	-	-	-	-	-	4.4	5.8*	5.8*	5.8*	2.9	4.8*	4.4	4.8*	2.1	4.3	3.1	4.4*	1.9	2.7*	2.7*	2.7*	8.0
	1.5 m	-	-	-	-	-	-	-	-	4.1	7.2*	6.4	7.2*	2.8	5.5*	4.2	5.5*	2.1	4.2	3.1	4.7*	1.9	2.8*	2.8	2.8*	8.0
	0 m	-	-	-	-	6.1*	6.1*	6.1*	6.1*	3.9	8.2*	6.1	8.2*	2.7	5.7	4.1	6.0*	2.0	4.2	3.0	4.9*	1.9	3.0*	1.8	3.0*	7.8
	-1.5 m	5.3 *	5.3 *	5.3 *	5.3 *	6.6	9.6*	9.6*	9.6*	3.8	8.4*	6.0	8.4*	2.6	5.7	4.0	6.2*	-	-	-	-	2.1	3.5*	3.1	3.5*	7.3
	-3 m	9.3 *	9.3 *	9.3 *	9.3 *	6.7	11.4*	11.4*	11.4*	3.8	7.8*	6.1	7.8*	2.6	5.6*	4.1	5.6*	-	-	-	-	2.5	4.5*	3.8	4.5*	6.4
	-4.5 m	-	-	-	-	-	-	-	-	4.0	5.6*	5.6*	5.6*	-	-	-	-	-	-	-	-	3.9	5.4*	5.4*	5.4*	4.6
5.0 m mono boom 2.0 m dipper arm Blade rear	7.5 m	-	-	-	-	-	-	-	-	-	-	-	-	-	-	-	-	-	-	-	-	-	-	-	-	-
	6 m	-	-	-	-	-	-	-	-	-	-	-	-	-	-	-	-	-	-	-	-	2.9	3.3	4.0*	4.0*	5.7
	4.5 m	-	-	-	-	-	-	-	-	4.1	4.6	5.3*	5.3*	2.6	2.9	4.2	4.7*	-	-	-	-	2.2	2.5	3.7	3.8*	6.5
	3 m	-	-	-	-	-	-	-	-	3.8	4.3	6.4	6.6*	2.5	2.8	4.1	5.2*	-	-	-	-	2.0	2.2	3.2	3.9*	7.0
	1.5 m	-	-	-	-	-	-	-	-	3.5	4.0	6.1	7.7*	2.4	2.7	4.0	5.7*	-	-	-	-	1.9	2.1	3.1	4.1*	7.1
	0 m	-	-	-	-	-	-	-	-	3.4	3.9	5.9	8.2*	2.3	2.6	3.9	6.0*	-	-	-	-	1.9	2.2	3.2	4.7*	6.8
	-1.5 m	-	-	-	-	6.1	7.2	11.4*	11.4*	3.4	3.9	5.9	7.9*	2.3	2.6	3.9	5.7*	-	-	-	-	2.2	2.5	3.7	5.4*	6.2
	-3 m	-	-	-	-	6.3	7.4	9.4*	9.4*	3.5	4.0	6.0	6.6*	-	-	-	-	-	-	-	-	3.0	3.4	5.0	5.5*	5.1
	-4.5 m	-	-	-	-	-	-	-	-	-	-	-	-	-	-	-	-	-	-	-	-	-	-	-	-	-
5.0 m mono boom 2.45 m dipper arm Blade rear	7.5 m	-	-	-	-	-	-	-	-	-	-	-	-	-	-	-	-	-	-	-	-	3.7*	3.7*	3.7*	3.7*	4.8
	6 m	-	-	-	-	-	-	-	-	-	-	-	-	2.7	3.0	4.0*	4.0*	-	-	-	-	2.5	2.8	3.2*	3.2*	6.2
	4.5 m	-	-	-	-	-	-	-	-	4.1	4.6	4.8*	4.8*	2.6	3.0	4.2	4.3*	-	-	-	-	2.0	2.3	3.0*	3.0*	7.0
	3 m	-	-	-	-	-	-	-	-	3.8	4.3	6.1*	6.1*	2.5	2.8	4.1	4.9*	-	-	-	-	1.8	2.0	2.9	3.1*	7.4
	1.5 m	-	-	-	-	-	-	-	-	3.5	4.0	6.1	7.4*	2.4	2.7	4.0	5.5*	1.7	1.9	2.8	3.3*	1.7	1.9	2.8	3.2*	7.5
	0 m	-	-	-	-	6.0	6.0*	6.0*	6.0*	3.3	3.8	5.9	8.1*	2.3	2.6	3.8	5.9*	-	-	-	-	1.7	2.0	2.9	3.6*	7.3
	-1.5 m	6.2 *	6.2 *	6.2 *	6.2 *	6.0	7.0	10.9*	10.9*	3.3	3.8	5.8	8.0*	2.2	2.6	3.8	5.8*	-	-	-	-	1.9	2.2	3.3	4.4*	6.7
	-3 m	-	-	-	-	6.1	7.2	10.3*	10.3*	3.4	3.9	5.9	7.1*	-	-	-	-	-	-	-	-	2.5	2.8	4.2	5.2*	5.7
	-4.5 m	-	-	-	-	-	-	-	-	-	-	-	-	-	-	-	-	-	-	-	-	-	-	-	-	-

Notes:
1. Working pressure with Power Boost = 37.5 MPa.
2. The above values are in compliance with ISO standard 10 567. They do not exceed 87 % of hydraulic lifting capacity or 75 % of tipping load, with the machine on firm, level ground.
3. Load capacities marked with an asterisk (*) are limited by machine's hydraulic lifting capacity rather than tipping load.

SPECIFICATIONS.

LIFTING CAPACITY

At the arm end, without bucket and quick fit. Unit: 1 000 kg.
For lifting capacity including bucket/quick fit, simply subtract actual weight of those parts from the following values. With heavy counterweight.

Across under-carriage / Along under-carriage	Arm end (bucket pivot) related to ground level	Reach from machine centre (u = support up/d = support down)																								
		1.5 m				3 m				4.5 m				6 m				7.5 m				Max.				Max.
		u	d	u	d	u	d	u	d	u	d	u	d	u	d	u	d	u	d	u	d	u	d	u	d	m
5.0 m mono boom 2.6 m dipper arm Blade rear	7.5 m	-	-	-	-	-	-	-	-	-	-	-	-	-	-	-	-	-	-	-	-	3.4*	3.4*	3.4*	3.4*	5.0
	6 m	-	-	-	-	-	-	-	-	-	-	-	-	2.7	3.0	4.0*	4.0*	-	-	-	-	2.4	2.7	2.9*	2.9*	6.4
	4.5 m	-	-	-	-	-	-	-	-	4.1	4.6*	4.6*	4.6*	2.6	3.0	4.2*	4.2*	-	-	-	-	1.9	2.2	2.8*	2.8*	7.2
	3 m	-	-	-	-	-	-	-	-	3.8	4.3	5.9*	5.9*	2.5	2.8	4.1	4.8*	1.7	2.0	2.9	3.3*	1.7	1.9	2.8*	2.8*	7.6
	1.5 m	-	-	-	-	-	-	-	-	3.5	4.0	6.1	7.2*	2.3	2.7	4.0	5.4*	1.7	1.9	2.8	4.1*	1.6	1.9	2.7	3.0*	7.6
	0 m	-	-	-	-	5.9	6.2*	6.2*	6.2*	3.3	3.8	5.9	8.0*	2.2	2.6	3.8	5.8*	-	-	-	-	1.7	1.9	2.8	3.4*	7.4
	-1.5 m	6.0*	6.0*	6.0*	6.0*	5.9	7.0	10.5*	10.5*	3.3	3.8	5.8	8.1*	2.2	2.5	3.8	5.9*	-	-	-	-	1.9	2.1	3.2	4.1*	6.9
	-3 m	-	-	-	-	6.1	7.1	10.6*	10.6*	3.3	3.8	5.9	7.2*	-	-	-	-	-	-	-	-	2.3	2.7	4.0	5.1*	5.9
	-4.5 m	-	-	-	-	-	-	-	-	-	-	-	-	-	-	-	-	-	-	-	-	-	-	-	-	-
5.0 m mono boom 3.1 m dipper arm Blade rear	7.5 m	-	-	-	-	-	-	-	-	-	-	-	-	-	-	-	-	-	-	-	-	2.6*	2.6*	2.6*	2.6*	5.7
	6 m	-	-	-	-	-	-	-	-	-	-	-	-	2.7	3.1	3.5*	3.5*	-	-	-	-	2.1	2.4	2.4*	2.4*	6.9
	4.5 m	-	-	-	-	-	-	-	-	-	-	-	-	2.7	3.0	3.8*	3.8*	1.8	2.0	2.9*	2.9*	1.7	2.0	2.3*	2.3*	7.7
	3 m	-	-	-	-	7.2	7.7*	7.7*	7.7*	3.9	4.4	5.3*	5.3*	2.5	2.9	4.1	4.4*	1.7	2.0	2.9	4.0*	1.5	1.8	2.3*	2.3*	8.0
	1.5 m	-	-	-	-	-	-	-	-	3.6	4.1	6.1	6.8*	2.4	2.7	4.0	5.1*	1.7	1.9	2.8	4.3*	1.5	1.7	2.4*	2.4*	8.1
	0 m	-	-	-	-	5.9	6.6*	6.6*	6.6*	3.3	3.8	5.9	7.8*	2.2	2.6	3.8	5.7*	1.6	1.9	2.8	4.5*	1.5	1.7	2.6	2.7*	7.9
	-1.5 m	5.3*	5.3*	5.3*	5.3*	5.8	6.9	9.6*	9.6*	3.2	3.7	5.8	8.1*	2.2	2.5	3.8	5.9*	-	-	-	-	1.6	1.9	2.8	3.1*	7.4
	-3 m	9.0*	9.0*	9.0*	9.0*	5.9	7.0	11.3*	11.3*	3.2	3.7	5.8	7.6*	2.2	2.5	3.8	5.4*	-	-	-	-	2.0	2.3	3.4	4.2*	6.5
	-4.5 m	-	-	-	-	6.2	7.3	8.6*	8.6*	3.4	3.9	5.7*	5.7*	-	-	-	-	-	-	-	-	3.0	3.4	4.8*	4.8*	4.9
5.0 m mono boom 2.95 m dipper arm for grab Blade rear	7.5 m	-	-	-	-	-	-	-	-	-	-	-	-	-	-	-	-	-	-	-	-	3.2*	2.1	3.2*	3.2*	5.6
	6 m	-	-	-	-	-	-	-	-	-	-	-	-	2.9	2.0	4.0*	4.0*	-	-	-	-	2.4	1.5	2.8*	2.8*	6.8
	4.5 m	-	-	-	-	-	-	-	-	-	-	-	-	2.9	1.9	4.2*	4.2*	2.0	1.3	3.1*	3.1*	2.0	1.3	2.7*	2.7*	7.6
	3 m	-	-	-	-	-	-	-	-	4.1	2.7	5.8*	5.8*	2.8	1.8	4.4	4.8*	2.0	1.3	3.1	4.4*	1.8	1.1	2.7*	2.7*	8.0
	1.5 m	-	-	-	-	-	-	-	-	3.8	2.4	6.4	7.2*	2.6	1.7	4.2	5.5*	1.9	1.2	3.1	4.7*	1.7	1.1	2.8	2.8*	8.0
	0 m	-	-	-	-	6.1*	3.5	6.1*	6.1*	3.6	2.2	6.1	8.2*	2.5	1.5	4.1	6.0*	1.9	1.2	3.0	4.9*	1.8	1.1	2.8	3.0*	7.8
	-1.5 m	5.3*	5.3*	5.3*	5.3*	6.2	3.5	9.6*	9.6*	3.5	2.1	6.0	8.4*	2.4	1.5	4.0	6.2*	-	-	-	-	1.9	1.2	3.1	3.5*	7.3
	-3 m	9.3*	9.3*	9.3*	9.3*	6.3	3.6	11.4*	11.4*	3.5	2.1	6.1	7.8*	2.5	1.5	4.1	5.6*	-	-	-	-	2.3	1.4	3.8	4.5*	6.4
	-4.5 m	-	-	-	-	-	-	-	-	3.7	2.3	5.6*	5.6*	-	-	-	-	-	-	-	-	3.6	2.2	5.4*	5.4*	4.6
5.1 m 2-piece boom 2.0 m dipper arm Front dozer blade Rear outriggers	7.5 m	-	-	-	-	-	-	-	-	-	-	-	-	-	-	-	-	-	-	-	-	4.7	5.2*	5.3*	5.2*	4.3
	6 m	-	-	-	-	-	-	-	-	4.5	4.8*	4.8*	4.8*	-	-	-	-	-	-	-	-	2.9	4.4*	4.4*	4.4*	5.8
	4.5 m	-	-	-	-	7.5*	7.4*	7.5*	7.4*	4.3	5.5*	5.6*	5.5*	2.7	4.6	4.2	4.9*	-	-	-	-	2.3	3.9	3.5	4.2*	6.7
	3 m	-	-	-	-	-	-	-	-	3.9	6.8*	6.4	6.8*	2.6	4.5	4.1	5.3*	-	-	-	-	2.0	3.4	3.2	4.2*	7.1
	1.5 m	-	-	-	-	-	-	-	-	3.7	6.7	6.1	8.0*	2.5	4.4	4.0	5.9*	-	-	-	-	1.9	3.3	3.0	4.4*	7.2
	0 m	-	-	-	-	-	-	-	-	3.6	6.5	5.9	8.4*	2.4	4.3	3.9	6.1*	-	-	-	-	2.0	3.5	3.2	5.0*	7.0
	-1.5 m	-	-	-	-	6.5	10.4	10.4*	10.4*	3.5	6.5	5.9	8.0*	2.4	4.3	3.9	5.8*	-	-	-	-	2.3	3.9	3.6	5.3*	6.4
	-3 m	-	-	-	-	-	-	-	-	-	-	-	-	-	-	-	-	-	-	-	-	-	-	-	-	-
	-4.5 m	-	-	-	-	-	-	-	-	-	-	-	-	-	-	-	-	-	-	-	-	-	-	-	-	-
5.1 m 2-piece boom, 2.45m dipper arm Front dozer blade Rear outriggers	7.5 m	-	-	-	-	-	-	-	-	4.4*	4.4*	4.4*	4.4*	-	-	-	-	-	-	-	-	3.7	4.0*	4.0*	4.0*	5.0
	6 m	-	-	-	-	-	-	-	-	4.2*	4.2*	4.2*	4.2*	2.8	4.3*	4.3*	4.3*	-	-	-	-	2.5	3.5*	3.5*	3.5*	6.4
	4.5 m	-	-	-	-	-	-	-	-	4.3	5.0*	5.0*	5.0*	2.8	4.5*	4.3	4.5*	-	-	-	-	2.0	3.3*	3.2	3.3*	7.2
	3 m	-	-	-	-	-	-	-	-	4.0	6.3*	6.3*	6.3*	2.6	4.5	4.1	5.0*	1.8	3.2	2.9	3.8*	1.8	3.1	2.9	3.3*	7.6
	1.5 m	-	-	-	-	-	-	-	-	3.7	6.7	6.1	7.6*	2.5	4.3	4.0	5.6*	1.8	3.1	2.9	4.7*	1.7	3.0	2.8	3.5*	7.7
	0 m	-	-	-	-	-	-	-	-	3.5	6.5	5.9	8.3*	2.4	4.2	3.9	6.0*	-	-	-	-	1.8	3.1	2.9	3.9*	7.4
	-1.5 m	-	-	-	-	6.3	9.4*	9.4*	9.4*	3.5	6.4	5.8	8.2*	2.4	4.2	3.8	6.0*	-	-	-	-	2.0	3.5	3.2	4.6*	6.9
	-3 m	-	-	-	-	-	-	-	-	3.6	6.5	5.9	7.2*	-	-	-	-	-	-	-	-	2.7	4.8	4.4	5.6*	5.5
	-4.5 m	-	-	-	-	-	-	-	-	-	-	-	-	-	-	-	-	-	-	-	-	-	-	-	-	-
5.1 m 2-piece boom, 2.6m dipper aem Front dozer blade Rear outriggers	7.5 m	-	-	-	-	-	-	-	-	-	-	-	-	-	-	-	-	-	-	-	-	3.5	3.7*	3.7*	3.7*	5.2
	6 m	-	-	-	-	-	-	-	-	-	-	-	-	2.8	4.1*	4.1*	4.1*	-	-	-	-	2.4	3.2*	3.2*	3.2*	6.5
	4.5 m	-	-	-	-	-	-	-	-	4.3	4.8*	4.8*	4.8*	2.8	4.4*	4.3	4.4*	-	-	-	-	2.0	3.1*	3.1	3.1*	7.3
	3 m	-	-	-	-	-	-	-	-	4.0	6.2*	6.2*	6.2*	2.6	4.5	4.1	4.9*	1.8	3.2	2.9	4.3*	1.8	3.0	2.8	3.1*	7.7
	1.5 m	-	-	-	-	-	-	-	-	3.7	6.7	6.1	7.5*	2.5	4.3	4.0	5.5*	1.8	3.1	2.8	4.6*	1.7	2.9	2.7	3.3*	7.8
	0 m	-	-	-	-	4.7*	4.7*	4.7*	4.7*	3.5	6.5	5.9	8.2*	2.4	4.2	3.8	6.0*	1.7	3.1	2.8	4.3*	1.7	3.0	2.8	3.6*	7.6
	-1.5 m	-	-	-	-	6.3	9.1*	9.1*	9.1*	3.4	6.4	5.8	8.2*	2.3	4.2	3.8	6.0*	-	-	-	-	1.9	3.4	3.1	4.3*	7.0
	-3 m	-	-	-	-	-	-	-	-	3.5	6.5	5.9	7.3*	-	-	-	-	-	-	-	-	2.4	4.3	4.0	5.2*	5.9
	-4.5 m	-	-	-	-	-	-	-	-	-	-	-	-	-	-	-	-	-	-	-	-	-	-	-	-	-

Notes:
1. Working pressure with Power Boost = 37.5 MPa.
2. The above values are in compliance with ISO standard 10 567. They do not exceed 87 % of hydraulic lifting capacity or 75 % of tipping load, with the machine on firm, level ground.
3. Load capacities marked with an asterisk (*) are limited by machine's hydraulic lifting capacity rather than tipping load.

LIFTING CAPACITY

At the arm end, without bucket and quick fit. Unit: 1 000 kg.
For lifting capacity including bucket/quick fit, simply subtract actual weight of those parts from the following values. With heavy counterweight.

Across under-carriage / Along under-carriage	Arm end (bucket pivot) related to ground level	Reach from machine centre (u = support up/d = support down)																								
		1.5 m				3 m				4.5 m				6 m				7.5 m				Max.				Max.
		u	d	u	d	u	d	u	d	u	d	u	d	u	d	u	d	u	d	u	d	u	d	u	d	m
5.1 m 2-piece boom 3.1m dipper arm Front dozer blade Rear outriggers	7.5 m	-	-	-	-	-	-	-	-	-	-	-	-	-	-	-	-	-	-	-	-	2.9	2.9*	2.9*	2.9*	5.9
	6 m	-	-	-	-	-	-	-	-	-	-	-	-	2.9	3.7*	3.7*	3.7*	-	-	-	-	2.1	2.6*	2.6*	2.6*	7.1
	4.5 m	-	-	-	-	-	-	-	-	4.2*	4.2*	4.2*	4.2*	2.8	4.0*	4.0*	4.0*	1.9	3.1	3.0	3.5*	1.7	2.5*	2.5*	2.5*	7.8
	3 m	-	-	-	-	-	-	-	-	4.1	5.6*	5.6*	5.6*	2.6	4.3	4.2	4.6*	1.8	3.0	2.9	4.1*	1.6	2.5*	2.5*	2.5*	8.2
	1.5 m	-	-	-	-	-	-	-	-	3.7	6.4	6.1	7.0*	2.5	4.1	4.0	5.3*	1.8	2.9	2.8	4.4*	1.5	2.5	2.4	2.6*	8.3
	0 m	-	-	-	-	5.2*	5.2*	5.2*	5.2*	3.5	6.1	5.9	8.0*	2.4	4.0	3.8	5.8*	1.7	2.9	2.8	4.6*	1.5	2.6	2.5	2.9*	8.1
	-1.5 m	-	-	-	-	6.2	8.3*	8.3*	8.3*	3.4	6.0	5.8	8.2*	2.3	3.9	3.8	6.0*	1.7	2.9	2.8	3.8*	1.7	2.8	2.7	3.3*	7.6
	-3 m	-	-	-	-	6.3	11.3*	11.3*	11.3*	3.4	6.1	5.8	7.7*	2.3	3.9	3.8	5.5*	-	-	-	-	2.0	3.4	3.3	4.3*	6.7
	-4.5 m	-	-	-	-	-	-	-	-	-	-	-	-	-	-	-	-	-	-	-	-	-	-	-	-	-
5.1 m 2-piece boom 2.95 m Grab Arm Front dozer blade Rear outriggers	7.5 m	-	-	-	-	-	-	-	-	-	-	-	-	-	-	-	-	-	-	-	-	3.2	3.5*	3.5*	3.5*	5.8
	6 m	-	-	-	-	-	-	-	-	-	-	-	-	3.1	4.1*	4.1*	4.1*	-	-	-	-	2.4	3.1*	3.1*	3.1*	7.0
	4.5 m	-	-	-	-	-	-	-	-	4.6	4.7*	4.7*	4.7*	3.0	4.4*	4.4*	4.4*	2.1	3.5	3.2	3.9*	2.0	2.9*	2.9*	2.9*	7.7
	3 m	-	-	-	-	-	-	-	-	4.3	6.1*	6.1*	6.1*	2.9	4.8	4.4	5.0*	2.1	3.4	3.2	4.5*	1.8	2.9*	2.8	2.9*	8.1
	1.5 m	-	-	-	-	-	-	-	-	4.0	7.0	6.4	7.5*	2.7	4.6	4.2	5.7*	2.0	3.3	3.1	4.8*	1.8	3.0	2.7	3.0*	8.2
	0 m	-	-	-	-	-	-	-	-	3.8	6.8	6.1	8.4*	2.6	4.5	4.1	6.2*	2.0	3.3	3.0	5.0*	1.8	3.0	2.8	3.2*	8.0
	-1.5 m	-	-	-	-	6.5	8.2*	8.2*	8.2*	3.7	6.7	6.1	8.5*	2.6	4.4	4.0	6.3*	-	-	-	-	2.0	3.3	3.0	3.7*	7.5
	-3 m	-	-	-	-	6.6	11.5*	11.5*	11.5*	3.7	6.7	6.1	7.9*	2.6	4.4	4.1	5.7*	-	-	-	-	2.4	4.0	3.7	4.8*	6.5
	-4.5 m	-	-	-	-	-	-	-	-	-	-	-	-	-	-	-	-	-	-	-	-	-	-	-	-	-
5.1 m 2-piece boom 2.0 m dipper arm Outriggers front and rear	7.5 m	-	-	-	-	-	-	-	-	-	-	-	-	-	-	-	-	-	-	-	-	4.7	5.2*	5.3*	5.2*	4.3
	6 m	-	-	-	-	-	-	-	-	4.5	4.8*	4.8*	4.8*	-	-	-	-	-	-	-	-	2.9	4.4*	4.4*	4.4*	5.8
	4.5 m	-	-	-	-	7.5*	7.4*	7.5*	7.4*	4.3	5.5*	5.6*	5.5*	2.8	4.9*	4.2	4.9*	-	-	-	-	2.3	4.2*	3.5	4.2*	6.7
	3 m	-	-	-	-	-	-	-	-	4.0	6.8*	6.3	6.8*	2.7	5.3*	4.1	5.3*	-	-	-	-	2.0	4.2*	3.1	4.2*	7.1
	1.5 m	-	-	-	-	-	-	-	-	3.7	8.0*	6.0	8.0*	2.5	5.6	4.0	5.9*	-	-	-	-	1.9	4.2	3.0	4.4*	7.2
	0 m	-	-	-	-	-	-	-	-	3.6	8.4*	5.9	8.4*	2.5	5.5	3.9	6.1*	-	-	-	-	2.0	4.4	3.1	5.0*	7.0
	-1.5 m	-	-	-	-	6.6	10.4	10.4*	10.4*	3.6	8.0	5.9	8.0*	2.5	5.5	3.9	5.8*	-	-	-	-	2.3	5.1	3.6	5.3*	6.4
	-3 m	-	-	-	-	-	-	-	-	-	-	-	-	-	-	-	-	-	-	-	-	-	-	-	-	-
	-4.5 m	-	-	-	-	-	-	-	-	-	-	-	-	-	-	-	-	-	-	-	-	-	-	-	-	-
5.1 m 2-piece boom 2.45m dipper arm Outriggers front and rear	7.5 m	-	-	-	-	-	-	-	-	4.4*	4.4*	4.4*	4.4*	-	-	-	-	-	-	-	-	3.8	4.0*	4.0*	4.0*	5.0
	6 m	-	-	-	-	-	-	-	-	4.2*	4.2*	4.2*	4.2*	2.8	4.3*	4.3	4.3*	-	-	-	-	2.5	3.5*	3.5*	3.5*	6.4
	4.5 m	-	-	-	-	-	-	-	-	4.4	5.0*	5.0*	5.0*	2.8	4.5*	4.3	4.5*	-	-	-	-	2.1	3.3*	3.2	3.3*	7.2
	3 m	-	-	-	-	-	-	-	-	4.0	6.3*	6.3*	6.3*	2.7	5.0*	4.1	5.0*	1.9	3.8*	2.9	3.8*	1.8	3.3*	2.9	3.3*	7.6
	1.5 m	-	-	-	-	-	-	-	-	3.7	7.6*	6.0	7.6*	2.5	5.6	3.9	5.6*	1.8	4.0	2.8	4.7*	1.8	3.5*	2.8	3.5*	7.7
	0 m	-	-	-	-	-	-	-	-	3.6	8.3*	5.9	8.3*	2.4	5.5	3.8	6.0*	-	-	-	-	1.8	3.9*	2.8	3.9*	7.4
	-1.5 m	-	-	-	-	6.4	9.4*	9.4*	9.4*	3.5	8.2*	5.8	8.2*	2.4	5.5	3.8	6.0*	-	-	-	-	2.0	4.5	3.2	4.6*	6.9
	-3 m	-	-	-	-	-	-	-	-	3.6	7.2*	5.9	7.2*	-	-	-	-	-	-	-	-	2.7	5.6*	4.3	5.6*	5.5
	-4.5 m	-	-	-	-	-	-	-	-	-	-	-	-	-	-	-	-	-	-	-	-	-	-	-	-	-
5.1 m 2-piece boom 2.6m dipper arm Outriggers front and rear	7.5 m	-	-	-	-	-	-	-	-	-	-	-	-	-	-	-	-	-	-	-	-	3.5	3.7*	3.7*	3.7*	5.2
	6 m	-	-	-	-	-	-	-	-	-	-	-	-	2.9	4.1*	4.1*	4.1*	-	-	-	-	2.4	3.2*	3.2*	3.2*	6.5
	4.5 m	-	-	-	-	-	-	-	-	4.4	4.8*	4.8*	4.8*	2.8	4.4*	4.3	4.4*	-	-	-	-	2.0	3.1*	3.1	3.1*	7.3
	3 m	-	-	-	-	-	-	-	-	4.0	6.2*	6.2*	6.2*	2.7	4.9*	4.1	4.9*	1.9	4.0	2.9	4.3*	1.8	3.1*	2.8	3.1*	7.7
	1.5 m	-	-	-	-	-	-	-	-	3.7	7.5*	6.1	7.5*	2.5	5.5*	3.9	5.5*	1.8	4.0	2.8	4.6*	1.7	3.3*	2.7	3.3*	7.8
	0 m	-	-	-	-	4.7*	4.7*	4.7*	4.7*	3.5	8.2*	5.8	8.2*	2.4	5.5	3.8	6.0*	1.8	3.9	2.8	4.3*	1.7	3.6*	2.7	3.6*	7.6
	-1.5 m	-	-	-	-	6.3	9.1*	9.1*	9.1*	3.5	8.2*	5.8	8.2*	2.4	5.4	3.8	6.0*	-	-	-	-	1.9	4.3*	3.1	4.3*	7.0
	-3 m	-	-	-	-	-	-	-	-	3.6	7.3*	5.9	7.3*	-	-	-	-	-	-	-	-	2.5	5.2*	3.9	5.2*	5.9
	-4.5 m	-	-	-	-	-	-	-	-	-	-	-	-	-	-	-	-	-	-	-	-	-	-	-	-	-
5.1 m 2-piece boom 3.1m dipper arm Outriggers front and rear	7.5 m	-	-	-	-	-	-	-	-	-	-	-	-	-	-	-	-	-	-	-	-	2.9	2.9*	2.9*	2.9*	5.9
	6 m	-	-	-	-	-	-	-	-	-	-	-	-	2.9	3.7*	3.7*	3.7*	-	-	-	-	2.1	2.6*	2.6*	2.6*	7.1
	4.5 m	-	-	-	-	-	-	-	-	4.2*	4.2*	4.2*	4.2*	2.8	4.0*	4.0*	4.0*	1.9	3.5*	3.0	3.5*	1.8	2.5*	2.5*	2.5*	7.8
	3 m	-	-	-	-	-	-	-	-	4.1	5.6*	5.6*	5.6*	2.7	4.6*	4.1	4.6*	1.9	4.1	2.9	4.1*	1.6	2.5*	2.5*	2.5*	8.2
	1.5 m	-	-	-	-	-	-	-	-	3.8	7.0*	6.1	7.0*	2.5	5.3*	4.0	5.3*	1.8	4.0	2.8	4.4*	1.5	2.6*	2.4	2.6*	8.3
	0 m	-	-	-	-	5.2*	5.2*	5.2*	5.2*	3.5	8.0*	5.8	8.0*	2.4	5.5	3.8	5.8*	1.7	3.9	2.8	4.6*	1.6	2.9*	2.5	2.9*	8.1
	-1.5 m	-	-	-	-	6.3	8.3*	8.3*	8.3*	3.4	8.2*	5.7	8.2*	2.3	5.4	3.7	6.0*	1.7	3.8*	2.7	3.8*	1.7	3.3*	2.7	3.3*	7.6
	-3 m	-	-	-	-	6.4	11.3*	11.3*	11.3*	3.5	7.7*	5.8	7.7*	2.3	5.4	3.8	5.5*	-	-	-	-	2.1	4.3*	3.3	4.3*	6.7
	-4.5 m	-	-	-	-	-	-	-	-	-	-	-	-	-	-	-	-	-	-	-	-	-	-	-	-	-

Notes:
1. Working pressure with Power Boost = 37.5 MPa.
2. The above values are in compliance with ISO standard 10 567. They do not exceed 87 % of hydraulic lifting capacity or 75 % of tipping load, with the machine on firm, level ground.
3. Load capacities marked with an asterisk (*) are limited by machine's hydraulic lifting capacity rather than tipping load.

SPECIFICATIONS.

LIFTING CAPACITY

At the arm end, without bucket and quick fit. Unit: 1 000 kg.
For lifting capacity including bucket/quick fit, simply subtract actual weight of those parts from the following values. With heavy counterweight.

Across under-carriage / Along under-carriage	Arm end (bucket pivot) related to ground level	Reach from machine centre (u = support up/d = support down)																								
		1.5 m				3 m				4.5 m				6 m				7.5 m				Max.				Max.
		u	d	u	d	u	d	u	d	u	d	u	d	u	d	u	d	u	d	u	d	u	d	u	d	m
5.1 m 2-piece boom 2.95 m Grab Arm Outriggers front and rear	7.5 m	-	-	-	-	-	-	-	-	-	-	-	-	-	-	-	-	-	-	-	-	3.2	3.5*	3.5*	3.5*	5.8
	6 m	-	-	-	-	-	-	-	-	-	-	-	-	3.1	4.1*	4.1*	4.1*	-	-	-	-	2.4	3.1*	3.1*	3.1*	7.0
	4.5 m	-	-	-	-	-	-	-	-	4.7	4.7*	4.7*	4.7*	3.1	4.4*	4.4*	4.4*	2.2	3.9*	3.2	3.9*	2.0	2.9*	2.9*	2.9*	7.7
	3 m	-	-	-	-	-	-	-	-	4.4	6.1*	6.1*	6.1*	2.9	5.0*	4.4	5.0*	2.1	4.3	3.1	4.5*	1.9	2.9*	2.8	2.9*	8.1
	1.5 m	-	-	-	-	-	-	-	-	4.0	7.5*	6.4	7.5*	2.8	5.7*	4.2	5.7*	2.0	4.2	3.1	4.8*	1.8	3.0*	2.7	3.0*	8.2
	0 m	-	-	-	-	-	-	-	-	3.8	8.4*	6.1	8.4*	2.6	5.7	4.1	6.2*	2.0	4.2	3.0	5.0*	1.8	3.2*	2.8	3.2*	8.0
	-1.5 m	-	-	-	-	6.6	8.2*	8.2*	8.2*	3.7	8.5*	6.0	8.5*	2.6	5.7	4.0	6.3*	-	-	-	-	2.0	3.7*	3.0	3.7*	7.5
	-3 m	-	-	-	-	6.7	11.5*	11.5*	11.5*	3.8	7.9*	6.1	7.9*	2.6	5.7	4.0	5.7*	-	-	-	-	2.4	4.8*	3.6	4.8*	6.5
	-4.5 m	-	-	-	-	-	-	-	-	-	-	-	-	-	-	-	-	-	-	-	-	-	-	-	-	-
5.1 m 2-piece boom 2.0 m dipper arm Blade rear	7.5 m	-	-	-	-	-	-	-	-	-	-	-	-	-	-	-	-	-	-	-	-	4.5	5.0	5.3*	5.2*	4.3
	6 m	-	-	-	-	-	-	-	-	4.2	4.8	4.8*	4.8*	-	-	-	-	-	-	-	-	2.7	3.1	4.4*	4.4*	5.8
	4.5 m	-	-	-	-	7.5*	7.4*	7.5*	7.4*	4.0	4.6	5.6*	5.5*	2.6	2.9	4.2	4.9*	-	-	-	-	2.1	2.4	3.5	4.2*	6.7
	3 m	-	-	-	-	-	-	-	-	3.7	4.2	6.3	6.8*	2.5	2.8	4.1	5.3*	-	-	-	-	1.9	2.1	3.1	4.2*	7.1
	1.5 m	-	-	-	-	-	-	-	-	3.5	4.0	6.0	8.0*	2.3	2.7	4.0	5.9*	-	-	-	-	1.8	2.1	3.0	4.4*	7.2
	0 m	-	-	-	-	-	-	-	-	3.3	3.8	5.9	8.4*	2.3	2.6	3.9	6.1*	-	-	-	-	1.9	2.1	3.1	5.0*	7.0
	-1.5 m	-	-	-	-	6.1	7.2	10.4*	10.4*	3.3	3.8	5.9	8.0*	2.3	2.6	3.9	5.8*	-	-	-	-	2.1	2.4	3.6	5.3*	6.4
	-3 m	-	-	-	-	-	-	-	-	-	-	-	-	-	-	-	-	-	-	-	-	-	-	-	-	-
	-4.5 m	-	-	-	-	-	-	-	-	-	-	-	-	-	-	-	-	-	-	-	-	-	-	-	-	-
5.1 m 2-piece boom 2.45m dipper arm Blade rear	7.5 m	-	-	-	-	-	-	-	-	4.3	4.4*	4.4*	4.4*	-	-	-	-	-	-	-	-	3.5	4.0	4.0*	4.0*	5.0
	6 m	-	-	-	-	-	-	-	-	4.2*	4.2*	4.2*	4.2*	2.7	3.0	4.3	4.3*	-	-	-	-	2.4	2.7	3.5*	3.5*	6.4
	4.5 m	-	-	-	-	-	-	-	-	4.1	4.6	5.0*	5.0*	2.6	2.9	4.3	4.5*	-	-	-	-	1.9	2.2	3.2	3.3*	7.2
	3 m	-	-	-	-	-	-	-	-	3.8	4.3	6.3*	6.3*	2.5	2.8	4.1	5.0*	1.7	2.0	2.9	3.8*	1.7	1.9	2.9	3.3*	7.6
	1.5 m	-	-	-	-	-	-	-	-	3.5	4.0	6.1	7.6*	2.3	2.7	3.9	5.6*	1.7	1.9	2.8	4.7*	1.6	1.9	2.8	3.5*	7.7
	0 m	-	-	-	-	-	-	-	-	3.3	3.8	5.9	8.3*	2.2	2.6	3.8	6.0*	-	-	-	-	1.7	1.9	2.8	3.9*	7.4
	-1.5 m	-	-	-	-	5.9	7.0	9.4*	9.4*	3.3	3.8	5.8	8.2*	2.2	2.5	3.8	6.0*	-	-	-	-	1.9	2.1	3.2	4.6*	6.9
	-3 m	-	-	-	-	-	-	-	-	3.3	3.8	5.9	7.2*	-	-	-	-	-	-	-	-	2.5	2.9	4.3	5.6*	5.5
	-4.5 m	-	-	-	-	-	-	-	-	-	-	-	-	-	-	-	-	-	-	-	-	-	-	-	-	-
5.1 m 2-piece boom 2.6m dipper arm Blade rear	7.5 m	-	-	-	-	-	-	-	-	-	-	-	-	-	-	-	-	-	-	-	-	3.3	3.7*	3.7*	3.7*	5.2
	6 m	-	-	-	-	-	-	-	-	-	-	-	-	2.7	3.0	4.1*	4.1*	-	-	-	-	2.3	2.6	3.2*	3.2*	6.5
	4.5 m	-	-	-	-	-	-	-	-	4.1	4.7	4.8*	4.8*	2.6	2.9	4.3	4.4*	-	-	-	-	1.8	2.1	3.1	3.1*	7.3
	3 m	-	-	-	-	-	-	-	-	3.8	4.3	6.2*	6.2*	2.5	2.8	4.1	4.9*	1.7	2.0	2.9	4.3*	1.6	1.9	2.8	3.1*	7.7
	1.5 m	-	-	-	-	-	-	-	-	3.5	4.0	6.1	7.5*	2.3	2.7	3.9	5.5*	1.7	1.9	2.8	4.6*	1.6	1.8	2.7	3.3*	7.8
	0 m	-	-	-	-	4.7*	4.7*	4.7*	4.7*	3.3	3.8	5.8	8.2*	2.2	2.5	3.8	6.0*	1.6	1.9	2.8	4.3*	1.6	1.8	2.7	3.6*	7.6
	-1.5 m	-	-	-	-	5.9	7.0	9.1*	9.1*	3.2	3.7	5.8	8.2*	2.2	2.5	3.8	6.0*	-	-	-	-	1.8	2.0	3.1	4.3*	7.0
	-3 m	-	-	-	-	-	-	-	-	3.3	3.8	5.9	7.3*	-	-	-	-	-	-	-	-	2.3	2.6	3.9	5.2*	5.9
	-4.5 m	-	-	-	-	-	-	-	-	-	-	-	-	-	-	-	-	-	-	-	-	-	-	-	-	-
5.1 m 2-piece boom 3.1m dipper arm Blade rear	7.5 m	-	-	-	-	-	-	-	-	-	-	-	-	-	-	-	-	-	-	-	-	2.7	2.9*	2.9*	2.9*	5.9
	6 m	-	-	-	-	-	-	-	-	-	-	-	-	2.7	3.1	3.7*	3.7*	-	-	-	-	2.0	2.2	2.6*	2.6*	7.1
	4.5 m	-	-	-	-	-	-	-	-	4.2	4.2*	4.2*	4.2*	2.6	3.0	4.0*	4.0*	1.8	2.0	3.0	3.5*	1.6	1.9	2.5*	2.5*	7.8
	3 m	-	-	-	-	-	-	-	-	3.9	4.4	5.6*	5.6*	2.5	2.8	4.1	4.6*	1.7	2.0	2.9	4.1*	1.5	1.7	2.5*	2.5*	8.2
	1.5 m	-	-	-	-	-	-	-	-	3.5	4.0	6.1	7.0*	2.3	2.7	4.0	5.3*	1.7	1.9	2.8	4.4*	1.4	1.6	2.4	2.6*	8.3
	0 m	-	-	-	-	5.2*	5.2*	5.2*	5.2*	3.3	3.8	5.8	8.0*	2.2	2.5	3.8	5.8*	1.6	1.8	2.8	4.6*	1.4	1.6	2.5	2.9*	8.1
	-1.5 m	-	-	-	-	5.8	6.9	8.3*	8.3*	3.2	3.7	5.7	8.2*	2.1	2.5	3.7	6.0*	1.6	1.8	2.7	3.8*	1.6	1.8	2.7	3.3*	7.6
	-3 m	-	-	-	-	5.9	7.0	11.3*	11.3*	3.2	3.7	5.8	7.7*	2.2	2.5	3.8	5.5*	-	-	-	-	1.9	2.2	3.3	4.3*	6.7
	-4.5 m	-	-	-	-	-	-	-	-	-	-	-	-	-	-	-	-	-	-	-	-	-	-	-	-	-
5.1 m 2-piece boom 2.95 m Grab Arm Blade rear	7.5 m	-	-	-	-	-	-	-	-	-	-	-	-	-	-	-	-	-	-	-	-	3.0	3.4	3.5*	3.5*	5.8
	6 m	-	-	-	-	-	-	-	-	-	-	-	-	2.9	3.3	4.1*	4.1*	-	-	-	-	2.2	2.5	3.1*	3.1*	7.0
	4.5 m	-	-	-	-	-	-	-	-	4.4	4.7*	4.7*	4.7*	2.9	3.2	4.4*	4.4*	2.0	2.3	3.2	3.9*	1.9	2.1	2.9*	2.9*	7.7
	3 m	-	-	-	-	-	-	-	-	4.1	4.6	6.1*	6.1*	2.7	3.1	4.4	5.0*	2.0	2.2	3.1	4.5*	1.7	2.0	2.8	2.9*	8.1
	1.5 m	-	-	-	-	-	-	-	-	3.8	4.3	6.4	7.5*	2.6	2.9	4.2	5.7*	1.9	2.1	3.1	4.8*	1.7	1.9	2.7	3.0*	8.2
	0 m	-	-	-	-	-	-	-	-	3.5	4.1	6.1	8.4*	2.5	2.8	4.1	6.2*	1.8	2.1	3.0	5.0*	1.7	1.9	2.8	3.2*	8.0
	-1.5 m	-	-	-	-	6.1	7.2	8.2*	8.2*	3.5	4.0	6.0	8.5*	2.4	2.7	4.0	6.3*	-	-	-	-	1.9	2.1	3.0	3.7*	7.5
	-3 m	-	-	-	-	6.3	7.3	11.5*	11.5*	3.5	4.0	6.1	7.9*	2.4	2.8	4.0	5.7*	-	-	-	-	2.2	2.5	3.6	4.8*	6.5
	-4.5 m	-	-	-	-	-	-	-	-	-	-	-	-	-	-	-	-	-	-	-	-	-	-	-	-	-

Notes:
1. Working pressure with Power Boost = 37.5 MPa.
2. The above values are in compliance with ISO standard 10 567. They do not exceed 87 % of hydraulic lifting capacity or 75 % of tipping load, with the machine on firm, level ground.
3. Load capacities marked with an asterisk (*) are limited by machine's hydraulic lifting capacity rather than tipping load.

LIFTING CAPACITY

At the arm end, without bucket and quick fit. Unit: 1 000 kg.
For lifting capacity including bucket/quick fit, simply subtract actual weight of those parts from the following values. With heavy counterweight.

Across under-carriage / Along under-carriage	Arm end (bucket pivot) related to ground level	Reach from machine centre (u = support up/d = support down)																								
		1.5 m				3 m				4.5 m				6 m				7.5 m				Max.				Max.
		u	d	u	d	u	d	u	d	u	d	u	d	u	d	u	d	u	d	u	d	u	d	u	d	m
4.75 m Mono offset boom 2.0 m dipper arm Front dozer blade Rear outriggers	7.5 m	-	-	-	-	-	-	-	-	-	-	-	-	-	-	-	-	-	-	-	-	-	-	-	-	-
	6 m	-	-	-	-	-	-	-	-	4.5	4.9*	4.9*	4.9*	-	-	-	-	-	-	-	-	3.4*	3.4*	3.4*	3.4*	5.2
	4.5 m	-	-	-	-	-	-	-	-	4.3	5.4*	5.4*	5.4*	2.7	4.1*	4.1*	4.1*	-	-	-	-	2.6	3.3*	3.3*	3.3*	6.2
	3 m	-	-	-	-	-	-	-	-	4.0	6.5*	6.5	6.5*	2.6	4.5	4.1	5.3*	-	-	-	-	2.3	3.4*	3.4*	3.4*	6.6
	1.5 m	-	-	-	-	-	-	-	-	3.7	6.7	6.1	7.7*	2.5	4.4	4.0	5.7*	-	-	-	-	2.1	3.7	3.4	3.8*	6.7
	0 m	-	-	-	-	6.0*	6.0*	6.0*	6.0*	3.5	6.5	5.9	8.1*	2.4	4.3	3.9	6.0*	-	-	-	-	2.2	3.8	3.5	4.5*	6.5
	-1.5 m	-	-	-	-	6.3	11.3*	11.3*	11.3*	3.5	6.5	5.9	7.8*	-	-	-	-	-	-	-	-	2.5	4.5	4.1	5.7*	5.8
	-3 m	-	-	-	-	6.6	8.9*	8.9*	8.9*	3.6	6.0*	6.0*	6.0*	-	-	-	-	-	-	-	-	3.6	5.9*	5.9*	5.9*	4.6
	-4.5 m	-	-	-	-	-	-	-	-	-	-	-	-	-	-	-	-	-	-	-	-	-	-	-	-	-
4.75 m Mono offset boom 2.45m dipper arm Front dozer blade Rear outriggers	7.5 m	-	-	-	-	-	-	-	-	-	-	-	-	-	-	-	-	-	-	-	-	-	-	-	-	-
	6 m	-	-	-	-	-	-	-	-	-	-	-	-	-	-	-	-	-	-	-	-	2.7*	2.7*	2.7*	2.7*	5.7
	4.5 m	-	-	-	-	-	-	-	-	4.4	4.8*	4.8*	4.8*	2.8	4.2*	4.2*	4.2*	-	-	-	-	2.4	2.6*	2.6*	2.6*	6.6
	3 m	-	-	-	-	7.4	9.1*	9.1*	9.1*	4.1	6.0*	6.0*	6.0*	2.7	4.5	4.2	4.9*	-	-	-	-	2.0	2.7*	2.7*	2.7*	7.0
	1.5 m	-	-	-	-	5.0*	5.0*	5.0*	5.0*	3.7	6.8	6.1	7.3*	2.5	4.4	4.0	5.5*	-	-	-	-	1.9	2.9*	2.9*	2.9*	7.1
	0 m	-	-	-	-	6.2	6.4*	6.4*	6.4*	3.5	6.5	5.9	8.0*	2.4	4.2	3.9	5.9*	-	-	-	-	2.0	3.4*	3.2	3.4*	6.9
	-1.5 m	5.8*	5.8*	5.8*	5.8*	6.2	10.2*	10.2*	10.2*	3.4	6.4	5.8	7.9*	2.4	4.2	3.8	5.7*	-	-	-	-	2.2	3.9	3.6	4.5*	6.3
	-3 m	-	-	-	-	6.4	9.9*	9.9*	9.9*	3.5	6.5	5.9	6.8*	-	-	-	-	-	-	-	-	2.9	5.3	4.8	5.6*	5.2
	-4.5 m	-	-	-	-	-	-	-	-	-	-	-	-	-	-	-	-	-	-	-	-	-	-	-	-	-
4.75 m Mono offset boom 2.6m dipper arm Front dozer blade Rear outriggers	7.5 m	-	-	-	-	-	-	-	-	-	-	-	-	-	-	-	-	-	-	-	-	-	-	-	-	-
	6 m	-	-	-	-	-	-	-	-	-	-	-	-	-	-	-	-	-	-	-	-	2.5*	2.5*	2.5*	2.5*	5.9
	4.5 m	-	-	-	-	-	-	-	-	4.5	4.7*	4.7*	4.7*	2.8	4.1*	4.1*	4.1*	-	-	-	-	2.3	2.4*	2.4*	2.4*	6.7
	3 m	-	-	-	-	7.5	8.7*	8.7*	8.7*	4.1	5.9*	5.9*	5.9*	2.7	4.6	4.2	4.8*	-	-	-	-	2.0	2.5*	2.5*	2.5*	7.2
	1.5 m	-	-	-	-	5.7*	5.7*	5.7*	5.7*	3.8	6.8	6.2	7.2*	2.5	4.4	4.0	5.4*	-	-	-	-	1.9	2.7*	2.7*	2.7*	7.3
	0 m	-	-	-	-	6.2	6.5*	6.5*	6.5*	3.5	6.5	5.9	8.0*	2.4	4.2	3.9	5.8*	-	-	-	-	1.9	3.2*	3.1	3.2*	7.0
	-1.5 m	5.5*	5.5*	5.5*	5.5*	6.2	9.9*	9.9*	9.9*	3.4	6.4	5.8	8.0*	2.3	4.2	3.8	5.8*	-	-	-	-	2.1	3.8	3.5	4.1*	6.4
	-3 m	-	-	-	-	10.2*	10.2*	10.2*	10.2*	5.9	6.5	5.9	7.0*	-	-	-	-	-	-	-	-	4.6	5.0	4.6	5.5*	5.4
	-4.5 m	-	-	-	-	-	-	-	-	-	-	-	-	-	-	-	-	-	-	-	-	-	-	-	-	-
4.75 m Mono offset boom 3.1m dipper arm Front dozer blade Rear outriggers	7.5 m	-	-	-	-	-	-	-	-	-	-	-	-	-	-	-	-	-	-	-	-	-	-	-	-	-
	6 m	-	-	-	-	-	-	-	-	-	-	-	-	2.8*	2.8*	2.8*	2.8*	-	-	-	-	2.0*	2.0*	2.0*	2.0*	6.5
	4.5 m	-	-	-	-	-	-	-	-	-	-	-	-	2.9	3.6*	3.6*	3.6*	-	-	-	-	1.9*	1.9*	1.9*	1.9*	7.2
	3 m	-	-	-	-	7.3*	7.3*	7.3*	7.3*	4.2	5.3*	5.3*	5.3*	2.7	4.5*	4.2	4.5*	1.9	2.4*	2.4*	2.4*	1.8	2.0*	2.0*	2.0*	7.6
	1.5 m	-	-	-	-	6.7	8.6*	8.6*	8.6*	3.8	6.7*	6.2	6.7*	2.5	4.4	4.0	5.1*	1.8	3.0*	2.8	3.0*	1.7	2.1*	2.1*	2.1*	7.7
	0 m	-	-	-	-	6.2	6.8*	6.8*	6.8*	3.5	6.5	5.9	7.7*	2.4	4.2	3.9	5.7*	1.7	2.5*	2.5*	2.5*	1.7	2.4*	2.4*	2.4*	7.5
	-1.5 m	4.8*	4.8*	4.8*	4.8*	6.1	9.0*	9.0*	9.0*	3.4	6.4	5.8	8.0*	2.3	4.1	3.8	5.8*	-	-	-	-	1.9	3.0*	3.0*	3.0*	7.0
	-3 m	7.7*	7.7*	7.7*	7.7*	6.2	11.0*	11.0*	11.0*	3.4	6.4	5.8	7.4*	-	-	-	-	-	-	-	-	2.3	4.2	3.8	4.4*	6.0
	-4.5 m	-	-	-	-	-	-	-	-	-	-	-	-	-	-	-	-	-	-	-	-	-	-	-	-	-
4.75 m Mono offset boom 2.0 m dipper arm Blade rear	7.5 m	-	-	-	-	-	-	-	-	-	-	-	-	-	-	-	-	-	-	-	-	-	-	-	-	-
	6 m	-	-	-	-	-	-	-	-	4.3	4.8	4.9*	4.9*	-	-	-	-	-	-	-	-	3.3	3.4*	3.4*	3.4*	5.2
	4.5 m	-	-	-	-	-	-	-	-	4.1	4.7	5.4*	5.4*	2.6	2.9	4.1*	4.1*	-	-	-	-	2.5	2.8	3.3*	3.3*	6.2
	3 m	-	-	-	-	-	-	-	-	3.8	4.3	6.5	6.5*	2.5	2.8	4.1	5.3*	-	-	-	-	2.1	2.4	3.4*	3.4*	6.6
	1.5 m	-	-	-	-	-	-	-	-	3.5	4.0	6.1	7.7*	2.4	2.7	4.0	5.7*	-	-	-	-	2.0	2.3	3.4	3.8*	6.7
	0 m	-	-	-	-	5.9	6.0*	6.0*	6.0*	3.3	3.8	5.9	8.1*	2.3	2.6	3.9	6.0*	-	-	-	-	2.0	2.3	3.5	4.5*	6.5
	-1.5 m	-	-	-	-	6.0	7.0	11.3*	11.3*	3.3	3.8	5.9	7.8*	-	-	-	-	-	-	-	-	2.4	2.7	4.0	5.7*	5.8
	-3 m	-	-	-	-	6.2	7.2	8.9*	8.9*	3.4	3.9	6.0	6.0*	-	-	-	-	-	-	-	-	3.4	3.9	5.9	5.9*	4.6
	-4.5 m	-	-	-	-	-	-	-*	-*	-	-	-	-	-	-	-	-	-	-	-	-	-	-	-	-	-
4.75 m Mono offset boom 2.45m dipper arm Blade rear	7.5 m	-	-	-	-	-	-	-	-	-	-	-	-	-	-	-	-	-	-	-	-	-	-	-	-	-
	6 m	-	-	-	-	-	-	-	-	-	-	-	-	-	-	-	-	-	-	-	-	2.7*	2.7*	2.7*	2.7*	5.7
	4.5 m	-	-	-	-	-	-	-	-	4.2	4.7	4.8*	4.8*	2.6	3.0	4.2*	4.2*	-	-	-	-	2.2	2.5	2.6*	2.6*	6.6
	3 m	-	-	-	-	7.0	8.1	9.1*	9.1*	3.9	4.4	6.0*	6.0*	2.5	2.8	4.1	4.9*	-	-	-	-	1.9	2.2	2.7*	2.7*	7.0
	1.5 m	-	-	-	-	5.0*	5.0*	5.0*	5.0*	3.5	4.0	6.1	7.3*	2.3	2.7	4.0	5.5*	-	-	-	-	1.8	2.1	2.9*	2.9*	7.1
	0 m	-	-	-	-	5.8	6.4*	6.4*	6.4*	3.3	3.8	5.9	8.0*	2.2	2.6	3.8	5.9*	-	-	-	-	1.8	2.1	3.2	3.4*	6.9
	-1.5 m	5.8*	5.8*	5.8*	5.8*	5.8	6.9	10.2*	10.2*	3.2	3.7	5.8	7.9*	2.2	2.5	3.8	5.7*	-	-	-	-	2.1	2.4	3.6	4.5*	6.3
	-3 m	-	-	-	-	6.0	7.1	9.9*	9.9*	3.3	3.8	5.9	6.8*	-	-	-	-	-	-	-	-	2.8	3.2	4.8	5.6*	5.2
	-4.5 m	-	-	-	-	-	-	-	-	-	-	-	-	-	-	-	-	-	-	-	-	-	-	-	-	-

Notes:
1. Working pressure with Power Boost = 37.5 MPa.
2. The above values are in compliance with ISO standard 10 567. They do not exceed 87 % of hydraulic lifting capacity or 75 % of tipping load, with the machine on firm, level ground.
3. Load capacities marked with an asterisk (*) are limited by machine's hydraulic lifting capacity rather than tipping load.

SPECIFICATIONS.

LIFTING CAPACITY

At the arm end, without bucket and quick fit. Unit: 1 000 kg.
For lifting capacity including bucket/quick fit, simply subtract actual weight of those parts from the following values. With heavy counterweight.

Across under-carriage / Along under-carriage	Arm end (bucket pivot) related to ground level	Reach from machine centre (u = support up/d = support down)																								
		1.5 m				3 m				4.5 m				6 m				7.5 m				Max.				Max.
		u	d	u	d	u	d	u	d	u	d	u	d	u	d	u	d	u	d	u	d	u	d	u	d	m
4.75 m Mono offset boom 2.6m dipper arm Blade rear	7.5 m	-	-	-	-	-	-	-	-	-	-	-	-	-	-	-	-	-	-	-	-	-	-	-	-	-
	6 m	-	-	-	-	-	-	-	-	-	-	-	-	-	-	-	-	-	-	-	-	2.5*	2.5*	2.5*	2.5*	5.9
	4.5 m	-	-	-	-	-	-	-	-	4.2	4.7*	4.7*	4.7*	2.7	3.0	4.1*	4.1*	-	-	-	-	2.1	2.4*	2.4*	2.4*	6.7
	3 m	-	-	-	-	7.1	8.3	8.7*	8.7*	3.9	4.4	5.9*	5.9*	2.5	2.9	4.2	4.8*	-	-	-	-	1.9	2.1	2.5*	2.5*	7.2
	1.5 m	-	-	-	-	5.7*	5.7*	5.7*	5.7*	3.5	4.1	6.2	7.2*	2.4	2.7	4.0	5.4*	-	-	-	-	1.8	2.0	2.7*	2.7*	7.3
	0 m	-	-	-	-	5.8	6.5*	6.5*	6.5*	3.3	3.8	5.9	8.0*	2.2	2.6	3.8	5.8*	-	-	-	-	1.8	2.1	3.1	3.2*	7.0
	-1.5 m	5.5*	5.5*	5.5*	5.5*	5.8	6.9	9.9*	9.9*	3.2	3.7	5.8	8.0*	2.2	2.5	3.8	5.8*	-	-	-	-	2.0	2.3	3.4	4.1*	6.4
	-3 m	-	-	-	-	10.2*	7.0	10.2*	10.2*	5.9	3.8	5.9	7.0*	-	-	-	-	-	-	-	-	4.5	3.0	4.5	5.5*	5.4
	-4.5 m	-	-	-	-	-	-	-	-	-	-	-	-	-	-	-	-	-	-	-	-	-	-	-	-	-
4.75 m Mono offset boom 3.1m dipper arm Blade rear	7.5 m	-	-	-	-	-	-	-	-	-	-	-	-	-	-	-	-	-	-	-	-	-	-	-	-	-
	6 m	-	-	-	-	-	-	-	-	-	-	-	-	2.8	2.8*	2.8*	2.8*	-	-	-	-	2.0*	2.0*	2.0*	2.0*	6.5
	4.5 m	-	-	-	-	-	-	-	-	-	-	-	-	2.7	3.0	3.6*	3.6*	-	-	-	-	1.9	1.9*	1.9*	1.9*	7.2
	3 m	-	-	-	-	7.3*	7.3*	7.3*	7.3*	4.0	4.5	5.3*	5.3*	2.6	2.9	4.2	4.5*	1.7	2.0	2.4*	2.4*	1.7	1.9	2.0*	2.0*	7.6
	1.5 m	-	-	-	-	6.4	7.4	8.6*	8.6*	3.6	4.1	6.2	6.7*	2.4	2.7	4.0	5.1*	1.7	1.9	2.8	3.0*	1.6	1.8	2.1*	2.1*	7.7
	0 m	-	-	-	-	5.8	6.8*	6.8*	6.8*	3.3	3.8	5.9	7.7*	2.2	2.5	3.8	5.7*	1.6	1.8	2.5*	2.5*	1.6	1.8	2.4*	2.4*	7.5
	-1.5 m	4.8*	4.8*	4.8*	4.8*	5.7	6.8	9.0*	9.0*	3.2	3.7	5.7	8.0*	2.1	2.5	3.7	5.8*	-	-	-	-	1.7	2.0	3.0*	3.0*	7.0
	-3 m	7.7*	7.7*	7.7*	7.7*	5.8	6.9	11.0*	11.0*	3.2	3.7	5.7	7.4*	-	-	-	-	-	-	-	-	2.2	2.5	3.8	4.4*	6.0
	-4.5 m	-	-	-	-	-	-	-	-	-	-	-	-	-	-	-	-	-	-	-	-	-	-	-	-	-
5.20 m 2-piece offset boom 2.0 m dipper arm Front dozer blade Rear outriggers	7.5 m	-	-	-	-	-	-	-	-	-	-	-	-	-	-	-	-	-	-	-	-	4.0*	4.0*	4.0*	4.0*	4.5
	6 m	-	-	-	-	-	-	-	-	4.5	4.6*	4.6*	4.6*	-	-	-	-	-	-	-	-	2.8	3.5*	3.5*	3.5*	5.9
	4.5 m	-	-	-	-	7.4*	7.3*	7.4*	7.3*	4.2	5.3*	5.4*	5.3*	2.7	4.6	4.2	4.6*	-	-	-	-	2.2	3.3*	3.3*	3.3*	6.8
	3 m	-	-	-	-	-	-	-	-	3.8	6.6*	6.3	6.6*	2.5	4.4	4.1	5.1*	-	-	-	-	1.9	3.3	3.0	3.3*	7.2
	1.5 m	-	-	-	-	-	-	-	-	3.5	6.5	5.9	7.7*	2.4	4.3	3.9	5.7*	-	-	-	-	1.8	3.2	2.9	3.6*	7.3
	0 m	-	-	-	-	-	-	-	-	3.4	6.4	5.7	8.1*	2.3	4.2	3.8	5.9*	-	-	-	-	1.8	3.3	3.0	4.0*	7.1
	-1.5 m	-	-	-	-	6.1	7.4*	7.4*	7.4*	3.4	6.4	5.7	7.9*	2.3	4.2	3.8	5.7*	-	-	-	-	2.1	3.8	3.4	5.0*	6.5
	-3 m	-	-	-	-	-	-	-	-	-	-	-	-	-	-	-	-	-	-	-	-	-	-	-	-	-
	-4.5 m	-	-	-	-	-	-	-	-	-	-	-	-	-	-	-	-	-	-	-	-	-	-	-	-	-
5.20 m 2-piece offset boom 2.45m dipper arm Front dozer blade Rear outriggers	7.5 m	-	-	-	-	-	-	-	-	-	-	-	-	-	-	-	-	-	-	-	-	3.1*	3.1*	3.1*	3.1*	5.1
	6 m	-	-	-	-	-	-	-	-	-	-	-	-	2.8	3.9*	3.9*	3.9*	-	-	-	-	2.4	2.7*	2.7*	2.7*	6.5
	4.5 m	-	-	-	-	-	-	-	-	4.3	4.8*	4.8*	4.8*	2.7	4.3*	4.3	4.3*	-	-	-	-	1.9	2.6*	2.6*	2.6*	7.2
	3 m	-	-	-	-	-	-	-	-	3.9	6.1*	6.1*	6.1*	2.6	4.5	4.1	4.8*	1.8	3.1	2.9	3.4*	1.7	2.6*	2.6*	2.6*	7.6
	1.5 m	-	-	-	-	-	-	-	-	3.5	6.6	5.9	7.4*	2.4	4.3	3.9	5.4*	1.7	3.1	2.8	4.2*	1.6	2.8*	2.7	2.8*	7.7
	0 m	-	-	-	-	-	-	-	-	3.3	6.3	5.7	8.0*	2.3	4.1	3.8	5.8*	1.7	3.0	2.7	3.2*	1.7	3.0	2.7	3.1*	7.5
	-1.5 m	-	-	-	-	6.0	6.8*	6.8*	6.8*	3.3	6.3	5.7	8.0*	2.2	4.1	3.7	5.8*	-	-	-	-	1.8	3.3	3.0	3.8*	7.0
	-3 m	-	-	-	-	-	-	-	-	3.4	6.4	5.8	7.1*	-	-	-	-	-	-	-	-	2.3	4.3	3.9	5.0*	5.9
	-4.5 m	-	-	-	-	-	-	-	-	-	-	-	-	-	-	-	-	-	-	-	-	-	-	-	-	-
5.20 m 2-piece offset boom 2.6m dipper arm Front dozer blade Rear outriggers	7.5 m	-	-	-	-	-	-	-	-	-	-	-	-	-	-	-	-	-	-	-	-	2.9*	2.9*	2.9*	2.9*	5.3
	6 m	-	-	-	-	-	-	-	-	-	-	-	-	2.8	3.8*	3.8*	3.8*	-	-	-	-	2.3	2.5*	2.5*	2.5*	6.6
	4.5 m	-	-	-	-	-	-	-	-	4.3	4.7*	4.7*	4.7*	2.7	4.2*	4.2*	4.2*	-	-	-	-	1.9	2.4*	2.4*	2.4*	7.4
	3 m	-	-	-	-	-	-	-	-	3.9	6.0*	6.0*	6.0*	2.6	4.5	4.1	4.7*	1.8	3.1	2.9	3.6*	1.7	2.4*	2.4*	2.4*	7.8
	1.5 m	-	-	-	-	-	-	-	-	3.5	6.6	6.0	7.3*	2.4	4.3	3.9	5.4*	1.7	3.1	2.8	4.3*	1.6	2.6*	2.6	2.6*	7.9
	0 m	-	-	-	-	-	-	-	-	3.3	6.3	5.7	8.0*	2.3	4.1	3.8	5.8*	1.7	3.0	2.7	4.0*	1.6	2.9*	2.7	2.9*	7.7
	-1.5 m	-	-	-	-	5.9	6.6*	6.6*	6.6*	3.3	6.3	5.7	8.0*	2.2	4.1	3.7	5.8*	-	-	-	-	1.8	3.2	2.9	3.5*	7.1
	-3 m	-	-	-	-	-	-	-	-	3.3	6.3	5.7	7.2*	2.3	4.2	3.8	5.1*	-	-	-	-	2.2	4.0	3.7	4.7*	6.2
	-4.5 m	-	-	-	-	-	-	-	-	-	-	-	-	-	-	-	-	-	-	-	-	-	-	-	-	-
5.20 m 2-piece offset boom 3.1m dipper arm Front dozer blade Rear outriggers	7.5 m	-	-	-	-	-	-	-	-	-	-	-	-	2.3*	2.3*	2.3*	2.3*	-	-	-	-	2.2*	2.2*	2.2*	2.2*	6.0
	6 m	-	-	-	-	-	-	-	-	-	-	-	-	2.9	3.3*	3.3*	3.3*	-	-	-	-	2.0*	2.0*	2.0*	2.0*	7.2
	4.5 m	-	-	-	-	-	-	-	-	-	-	-	-	2.8	3.8*	3.8*	3.8*	1.9	2.9*	2.9*	2.9*	1.7	1.9*	1.9*	1.9*	7.9
	3 m	-	-	-	-	-	-	-	-	4.0	5.4*	5.4*	5.4*	2.6	4.4*	4.1	4.4*	1.8	3.2	2.9	3.7*	1.5	2.0*	2.0*	2.0*	8.3
	1.5 m	-	-	-	-	-	-	-	-	3.6	6.7	6.0	6.8*	2.4	4.3	3.9	5.1*	1.7	3.1	2.8	4.2*	1.4	2.1*	2.1*	2.1*	8.4
	0 m	-	-	-	-	3.8*	3.8*	3.8*	3.8*	3.3	6.3	5.7	7.7*	2.2	4.1	3.7	5.6*	1.6	3.0	2.7	4.5*	1.4	2.3*	2.3*	2.3*	8.2
	-1.5 m	-	-	-	-	5.8	6.0*	6.0*	6.0*	3.2	6.2	5.6	8.0*	2.2	4.0	3.7	5.8*	1.6	2.9	2.7	3.6*	1.6	2.6*	2.6	2.6*	7.6
	-3 m	-	-	-	-	5.9	9.7*	9.7*	9.7*	3.2	6.2	5.6	7.5*	2.2	4.1	3.7	5.4*	-	-	-	-	1.9	3.4*	3.1	3.4*	6.8
	-4.5 m	-	-	-	-	-	-	-	-	-	-	-	-	-	-	-	-	-	-	-	-	-	-	-	-	-

Notes:
1. Working pressure with Power Boost = 37.5 MPa.
2. The above values are in compliance with ISO standard 10 567. They do not exceed 87 % of hydraulic lifting capacity or 75 % of tipping load, with the machine on firm, level ground.
3. Load capacities marked with an asterisk (*) are limited by machine's hydraulic lifting capacity rather than tipping load.

LIFTING CAPACITY

At the arm end, without bucket and quick fit. Unit: 1 000 kg.
For lifting capacity including bucket/quick fit, simply subtract actual weight of those parts from the following values. With heavy counterweight.

Across under-carriage / Along under-carriage	Arm end (bucket pivot) related to ground level	Reach from machine centre (u = support up/d = support down)																								
		1.5 m				3 m				4.5 m				6 m				7.5 m				Max.				Max.
		u	d	u	d	u	d	u	d	u	d	u	d	u	d	u	d	u	d	u	d	u	d	u	d	m
5.20 m 2-piece offset boom 2.0 m dipper arm Blade rear	7.5 m	-	-	-	-	-	-	-	-	-	-	-	-	-	-	-	-	-	-	-	-	4.0*	4.0*	4.0*	4.0*	4.5
	6 m	-	-	-	-	-	-	-	-	4.3	4.6*	4.6*	4.6*	-	-	-	-	-	-	-	-	2.6	3.0	3.5*	3.5*	5.9
	4.5 m	-	-	-	-	7.4*	7.3*	7.4*	7.3*	4.0	4.5	5.4*	5.3*	2.5	2.9	4.2	4.6*	-	-	-	-	2.0	2.3	3.3*	3.3*	6.8
	3 m	-	-	-	-	-	-	-	-	3.6	4.1	6.3	6.6*	2.4	2.7	4.0	5.1*	-	-	-	-	1.8	2.0	3.0	3.3*	7.2
	1.5 m	-	-	-	-	-	-	-	-	3.3	3.8	5.9	7.7*	2.2	2.6	3.9	5.7*	-	-	-	-	1.7	1.9	2.9	3.6*	7.3
	0 m	-	-	-	-	-	-	-	-	3.1	3.7	5.7	8.1*	2.1	2.5	3.8	5.9*	-	-	-	-	1.7	2.0	3.0	4.0*	7.1
	-1.5 m	-	-	-	-	5.8	6.8	7.4*	7.4*	3.1	3.6	5.7	7.9*	2.1	2.5	3.8	5.7*	-	-	-	-	1.9	2.2	3.4	5.0*	6.5
	-4.5 m	-	-	-	-	-	-	-	-	-	-	-	-	-	-	-	-	-	-	-	-	-	-	-	-	-
5.20 m 2-piece offset boom 2.45m dipper arm Blade rear	7.5 m	-	-	-	-	-	-	-	-	-	-	-	-	-	-	-	-	-	-	-	-	3.1*	3.1*	3.1*	3.1*	5.1
	6 m	-	-	-	-	-	-	-	-	-	-	-	-	2.7	3.0	3.9*	3.9*	-	-	-	-	2.3	2.6	2.7*	2.7*	6.5
	4.5 m	-	-	-	-	-	-	-	-	4.1	4.6	4.8*	4.8*	2.6	2.9	4.3	4.3*	-	-	-	-	1.8	2.1	2.6*	2.6*	7.2
	3 m	-	-	-	-	-	-	-	-	3.7	4.2	6.1*	6.1*	2.4	2.7	4.1	4.8*	1.7	1.9	2.8	3.4*	1.6	1.8	2.6*	2.6*	7.6
	1.5 m	-	-	-	-	-	-	-	-	3.3	3.8	5.9	7.4*	2.2	2.6	3.9	5.4*	1.6	1.8	2.8	4.2*	1.5	1.8	2.6	2.8*	7.7
	0 m	-	-	-	-	-	-	-	-	3.1	3.6	5.7	8.0*	2.1	2.4	3.7	5.8*	1.5	1.8	2.7	3.2*	1.5	1.8	2.7	3.1*	7.5
	-1.5 m	-	-	-	-	5.6	6.7	6.8*	6.8*	3.1	3.6	5.6	8.0*	2.1	2.4	3.7	5.8*	-	-	-	-	1.7	2.0	3.0	3.8*	7.0
	-3 m	-	-	-	-	-	-	-	-	3.1	3.7	5.7	7.1*	-	-	-	-	-	-	-	-	2.2	2.5	3.9	5.0*	5.9
	-4.5 m	-	-	-	-	-	-	-	-	-	-	-	-	-	-	-	-	-	-	-	-	-	-	-	-	-
5.20 m 2-piece offset boom 2.6m dipper arm Blade rear	7.5 m	-	-	-	-	-	-	-	-	-	-	-	-	-	-	-	-	-	-	-	-	2.9*	2.9*	2.9*	2.9*	5.3
	6 m	-	-	-	-	-	-	-	-	-	-	-	-	2.7	3.0	3.8*	3.8*	-	-	-	-	2.2	2.5	2.5*	2.5*	6.6
	4.5 m	-	-	-	-	-	-	-	-	4.1	4.7*	4.7*	4.7*	2.6	2.9	4.2*	4.2*	-	-	-	-	1.8	2.0	2.4*	2.4*	7.4
	3 m	-	-	-	-	-	-	-	-	3.7	4.2	6.0*	6.0*	2.4	2.8	4.1	4.7*	1.7	1.9	2.9	3.6*	1.6	1.8	2.4*	2.4*	7.8
	1.5 m	-	-	-	-	-	-	-	-	3.3	3.8	5.9	7.3*	2.2	2.6	3.9	5.4*	1.6	1.8	2.8	4.4*	1.5	1.7	2.6	2.6*	7.9
	0 m	-	-	-	-	-	-	-	-	3.1	3.6	5.7	8.0*	2.1	2.4	3.7	5.8*	1.5	1.8	2.7	4.0*	1.5	1.7	2.6	2.9*	7.7
	-1.5 m	-	-	-	-	5.6	6.6*	6.6*	6.6*	3.0	3.6	5.6	8.0*	2.1	2.4	3.7	5.8*	-	-	-	-	1.7	1.9	2.9	3.5*	7.1
	-3 m	-	-	-	-	-	-	-	-	3.1	3.6	5.7	7.2*	2.1	2.5	3.8	5.1*	-	-	-	-	2.1	2.4	3.6	4.7*	6.2
	-4.5 m	-	-	-	-	-	-	-	-	-	-	-	-	-	-	-	-	-	-	-	-	-	-	-	-	-
5.20 m 2-piece offset boom 3.1m dipper arm Blade rear	7.5 m	-	-	-	-	-	-	-	-	-	-	-	-	2.3 *	2.3*	2.3*	2.3*	-	-	-	-	2.2*	2.2*	2.2*	2.2*	6.0
	6 m	-	-	-	-	-	-	-	-	-	-	-	-	2.7	3.1	3.3*	3.3*	-	-	-	-	1.9	2.0*	2.0*	2.0*	7.2
	4.5 m	-	-	-	-	-	-	-	-	-	-	-	-	2.6	3.0	3.8*	3.8*	1.8	2.0	2.9*	2.9*	1.6	1.8	1.9*	1.9*	7.9
	3 m	-	-	-	-	-	-	-	-	3.8	4.4	5.4*	5.4*	2.5	2.8	4.1	4.4*	1.7	1.9	2.9	3.7*	1.4	1.6	2.0*	2.0*	8.3
	1.5 m	-	-	-	-	-	-	-	-	3.4	3.9	6.0	6.8*	2.2	2.6	3.9	5.1*	1.6	1.8	2.8	4.2*	1.3	1.5	2.1*	2.1*	8.4
	0 m	-	-	-	-	3.8*	3.8*	3.8*	3.8*	3.1	3.6	5.7	7.7*	2.1	2.4	3.7	5.6*	1.5	1.8	2.7	4.5*	1.3	1.6	2.3*	2.3*	8.2
	-1.5 m	-	-	-	-	5.4	6.0*	6.0*	6.0*	3.0	3.5	5.6	8.0*	2.0	2.3	3.6	5.8*	1.5	1.7	2.7	3.6*	1.4	1.7	2.6	2.6*	7.6
	-3 m	-	-	-	-	5.6	6.6	9.7*	9.7*	3.0	3.5	5.6	7.5*	2.0	2.4	3.7	5.4*	-	-	-	-	1.8	2.0	3.1	3.4*	6.8
	-4.5 m	-	-	-	-	-	-	-	-	-	-	-	-	-	-	-	-	-	-	-	-	-	-	-	-	-

Notes:
1. Working pressure with Power Boost = 37.5 MPa.
2. The above values are in compliance with ISO standard 10 567. They do not exceed 87 % of hydraulic lifting capacity or 75 % of tipping load, with the machine on firm, level ground.
3. Load capacities marked with an asterisk (*) are limited by machine's hydraulic lifting capacity rather than tipping load.

EQUIPMENT.

STANDARD EQUIPMENT

Engine
Turbocharged, 4 stroke Volvo diesel engine with water cooling, direct injection and charged air cooler that meets EU Step IIIB/Tier4 emission requirements
Intake air pre-heater
ECO- Modus
Fuel filter and water separator
Fuel filler pump: 50 l/min with automatic shut-off
Aluminium core radiator
Electric/Electronic control system
Contronics-computerized monitoring and diagnostic system
Master electrical disconnect switch
Adjustable automatic idling system
One-touch power boost
Adjustable monitor
Safety stop/start function
2 Frame mounted halogen lamps
Alternator,120 A
Batteries, 2 x 12 V/140 Ah
Start motor, 24 V/5.5 kW
CareTrack via GSM
Rear view camera
Undercarriage
2-speed power transmission plus creep speed
Oscillating front axle ± 9° with out mudguards/ 6° with mudguards
2-circuit travel brakes
Maintenance-free propeller shafts
Superstructure
LED Rear lights
Service walkway with anti-slip grating
Centralised lubricating point for slew bearing
Digging equipment
Attachment points for extra hydraulics
Centralised lubrication point
Cab and interior
Volvo Care Cab with fixed roof hatch /ROPS
Heater & air-conditioner, automatic
Hydraulic dampening cab mounts
Adjustable operator seat and joystick control console
Adjustable steering column
Hydraulic safety lock lever
Control joystick, with 5 switches each
Cab, all-weather sound suppressed, includes:
Cup holder
Door locks
Safety glass, light tinted
Floor mat
Horn
Large storage area
Pull-up type front window
Removable lower windshield
Retractable seat belt
Windshield wiper with washer and intermittent feature
Sun shield,front, roof & rear
Master ignition key
Hydraulic system
Load sensing hydraulic system
Cylinder cushioning
Cylinder contamination seals
Return filter of full flow type 2 000 h exchange interval
Pressure relief system (servo accumulator)
Proportional controlled visco-clutch cooling fan
Hose rupture valve for boom
Hydraulic long life oil ISO VG 46

OPTIONAL EQUIPMENT

Engine
Diesel coolant heater with digital timer
Block heater, 240 V
Water separator with heater
Dust net
Reversable fan
Tropical cooling
CareTrack via satellite
Electric / Electronic control system
Travel alarm
Rotating beacon
Extra work lights:
Service walkway 1 and counterweight 1
Boom-mounted 2
Cab front 2
LED lights
Multi-channel electric centre passage
Anti-theft system
Tilting and rotating attachment preparation
Hydraulic system
Hose rupture valve for dipper arm
Boom float function
Boom Suspension System
Hydraulic oil, biodegradable ISO VG 32
Hydraulic oil, biodegradable ISO VG 46
Hydraulic long life oil ISO VG 32
Hydraulic long life oil ISO VG 68
Hydraulic equipment for:
Hammer & shears
Slope bucket/rotator
Grab/clam shell
Quick fit
Flow control
Flow and pressure control
Cab and interior
Volvo Care Cab with openable PC roof hatch / ROPS
Tiltrotator Joystick
Proportional control joystick
On/off joystick
Falling object guard (FOG)
Cab mounted falling object protective structures (FOPS)
Rain shield, front
Side camera
Sunlight protection, roof hatch (steel)
Safety net for front window
Lower wiper
Anti-vandalism kit
Radio with CD player and MP3 input
Ashtray
Lighter
Seat:
Fabric seat, with heater
Fabric seat, with heater and air suspension
Luxury operator seat
Undercarriage
Trailer Towing System
Twin tires 10.00 – 20 / 11.00 – 20
Single tires 18R – 19.5 / 620/40-22.5
Stone protection rings
Front dozer blade and rear outriggers
Rear dozer blade
Front outriggers and rear dozer blade
4 outriggers
Grab holder
Mudguards, front/rear
Tool box, left hand side/right hand side
Cruise control
Travel speed 20 km/h, 30 km/h, 35 km/h
Wide axle 2.75 m

OPTIONAL EQUIPMENT

Digging equipment
Booms
5.0 m mono boom
5.1 m 2-piece boom
4.75 m mono offset boom
5.2 m 2-piece offset boom
Dipper arms
2.0 m, 2.45 m, 2.6 m, 3.1 m
2.95 m grab arm
Hydraulic quick fit
S1 system
S6 system
Universal system
Attachments
Buckets, direct fit and quick fit:
General Purpose bucket (GP)
Heavy Duty bucket
Slope bucket
Lifting eye
Service
Wheel chocks
Tool kit, daily maintenance
Superstucture
Heavy counter weight
License plate preparation

Standard and optional equipment may vary by market.
Please consult your local Volvo dealer for details.

SELECTION OF VOLVO OPTIONAL EQUIPMENT

Boomfloat

Boom Suspension System

Elevated cab

Heavy counterweight

Auto digging brake

Tilt rotator joysticks

Ref. No 20030257-E / English-21 / 2014.04 / EXC / Volvo, Global Marketing

VOLVO

Volvo Construction Equipment

www.volvoce.com